MPS II - Spring 2013 – A-Team

CAD Drawings

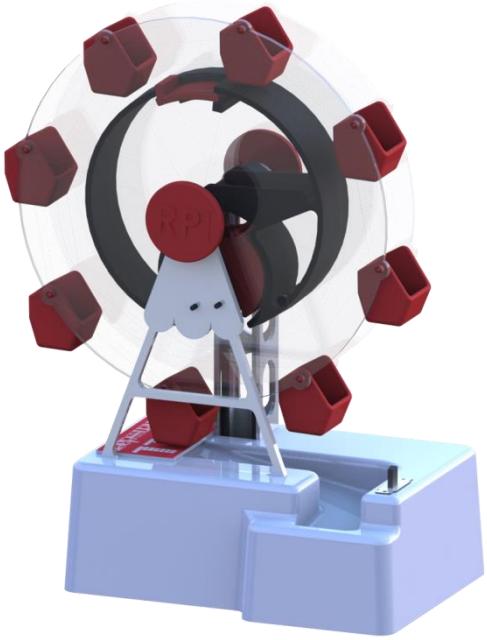

Ferris Wheel Candy Dispenser

Christina Pacifico
Daniel Golding
Eric Arntzen
James Robinson-Liu
Joshua Gabai
Michael Snyder
Patrick Pilvines
Robert McDonald
Seth Wraight
Trevor Burtzos
Vidyavisal Mangipudi
Vincent Terranova
Wesley Koo

Faculty Advisors: Sam Chiappone, Larry Ruff, Dan Baker

May 8, 2013

Manufacturing CAD Drawings

ITEM NO.	PART NUMBER	DESCRIPTION	QTY.
1	12CandyA_LowerBase12_C_041112	Lower Base	1
2	12CandyA_BatteryMount12_PC_021107	BATTERY HOLDER, SZ AA, ONE CELL	1
3	12CandyA_Motor09_PC_021108	Motor	1
4	12CandyA_MotorStrap19_C_021108	Motor Strap	1
5	12CandyA_UpperBase11_C_041112	Upper Base	1
6	12CandyA_OnSwitch18_PC_011107	On Switch	1
7	12CandyA_BackSupport06_C_071108	Back Support	1
8	12CandyA_AxlePin14_C_041206	Axle Pin	2
9	12CandyA_Axle07_C_051016	Axle	1
10	12CandyA_MotorDriveBeltCarrier20_C_051129	Motor Drive Belt Carrier	1
11	12CandyA_Jar04_C_021017	Jar	1
12	12CandyA_Struts03_C_061017	Front Struts	2
13	12CandyA_Doser10_C_061112	Doser	1
14	12CandyA_MainGear15_C_051017	Main Gear	1
15	12CandyA_JarLid02_C_031108	Jar Lid	1
16	12CandyA_DriveBeltCarrier16_C_061108	Drive Belt Carrier	1
17	12CandyA_FrontSupport05_C_031108	Front Support	1
18	12CandyA_OuterGear13_C_051108	Outer Gear	1
20	12CandyA_LogoPlate22_C_010502	Logo Plate	1
21	12CandyA_Cart01_C_010904	Cart	8
22	Drive belt for renders	Drive Belt	1
23	12CandyA_Funnel20_C_010409	Funnel	1
24	12CandyA_Washer21_C_01412	Washer	1
25	90930A201	Bracing Screw	1

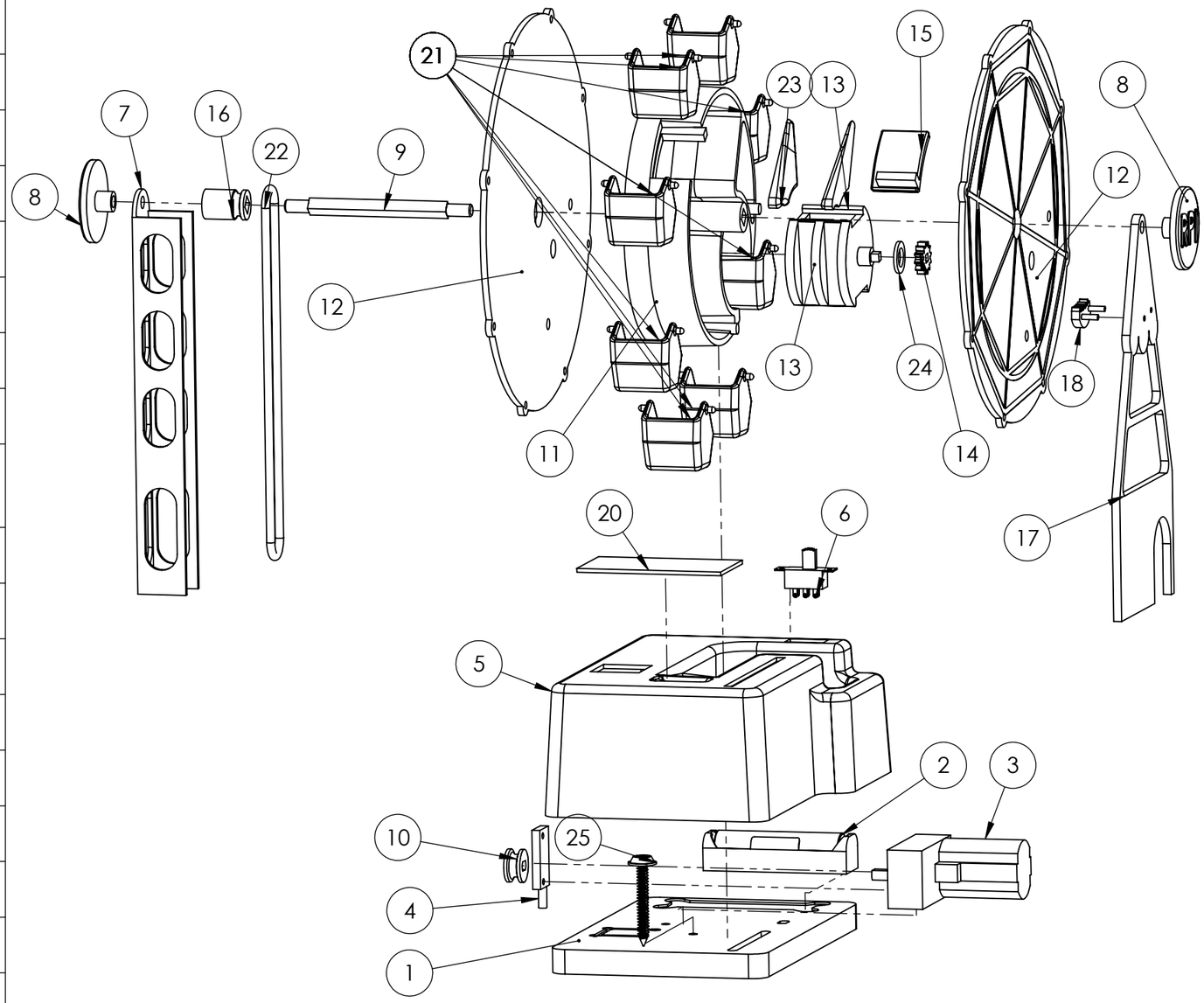

SolidWorks Student Edition.
For Academic Use Only.

DWG NOTES: (UNLESS OTHERWISE NOTED)
1) ALL UNITS: INCHES
2) < FILL IN NOTES HERE >

MATERIAL: < INSERT MATERIAL HERE >

TOLERANCES (UNLESS NOTED)

DECIMAL: X.X : ±0.015, X.XX : ±0.01, X.XXX : ±0.005

FRACTIONAL: ±1/32

NO. PARTS REQ'D: < # >

RENSSELAER POLYTECHNIC INSTITUTE

EXPLODED VIEW

DRAWN BY: SETH WRAIGHT/DANIEL GOLDING

E-MAIL: WRAIGS@RPI.EDU **PHONE:** (607)342-1812

FACULTY ADVISOR: Samuel Chiaponne **CHECKED: (INITIALS)**

SIZE B | **COURSE NAME/NUMBER:** MP&S Ferris Wheel Team | SECTION D

DATE: Friday, May 03, 2013 1:40:25 AM

SCALE 1:2 | CAD FILE: 12CandyA_CandyWheel_MA_031112 | SHEET 1 OF 1

REV.	DESCRIPTION	DATE	APPROVED
A	Initial Revision S13	3/20/13	Eric A
B	Updated to reflect machining requirements & tolerances	5/7/2013	Eric A.

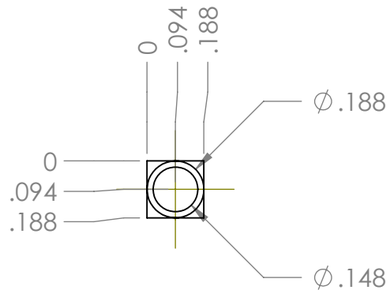

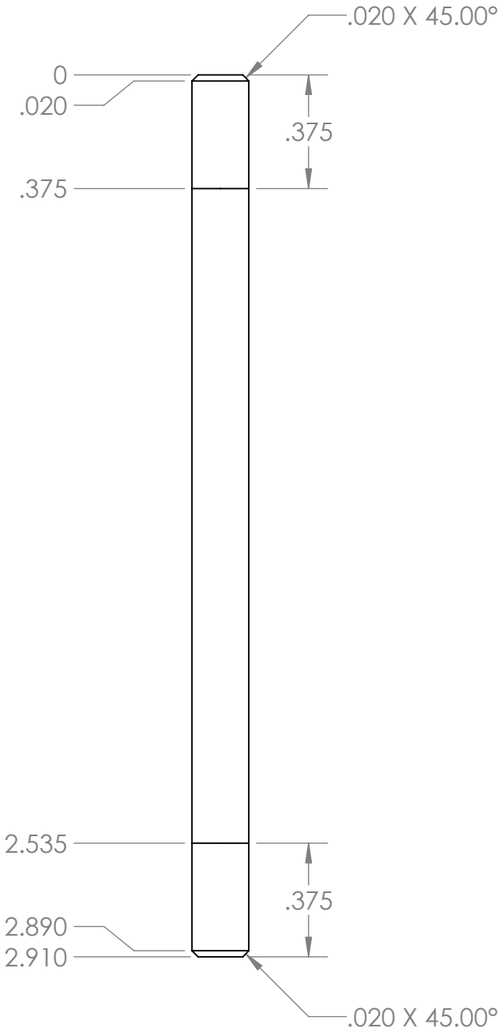

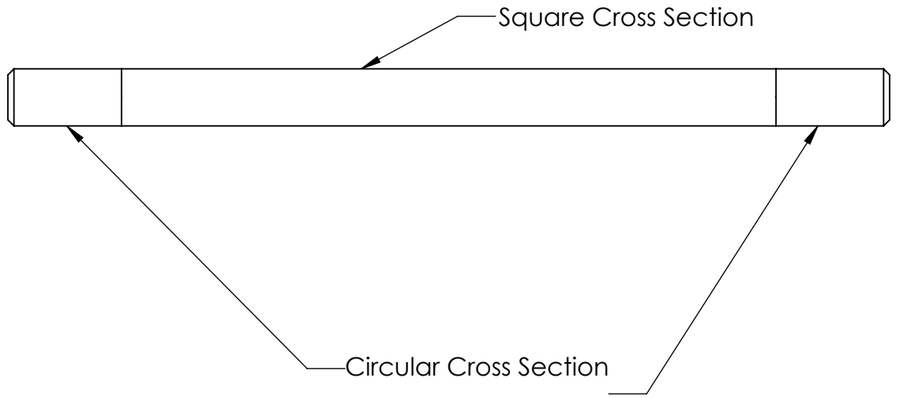

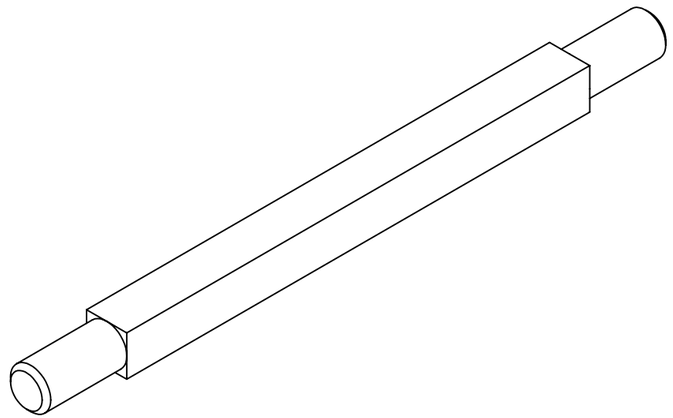

DWG NOTES: (UNLESS OTHERWISE NOTED)
1) ALL UNITS: INCHES
2) BREAK ALL SHARP EDGES
3) DEBURR ENDS BEFORE MACHINING
4) CUT STOCK TO LENGTH (+/- 0.125") BEFORE MACHINING

MATERIAL: Low Carbon Steel

TOLERANCES (UNLESS NOTED)

DECIMAL: X.X : ±0.015, X.XX : ±0.01, X.XXX : ±0.005

FRACTIONAL: ±1/32

NO. PARTS REQ'D: 403

RENSSELAER POLYTECHNIC INSTITUTE

Axle
(Part #: 07)

DRAWN BY: Patrick E. Pilvines
E-MAIL: pilvip@rpi.edu **PHONE:** (339) 364 - 1707
FACULTY ADVISOR: Samuel Chiaponne **CHECKED:** PEP

SIZE B | **COURSE NAME/NUMBER:** MP&S Ferris Wheel Team | SECTION D
DATE: Wednesday, March 20, 2013 7:41:47 PM
SCALE 2:1 | CAD FILE: 12CandyA_Axle07_C_051016 | SHEET 1 OF 1

REV.	DESCRIPTION	DATE	APPROVED
A	`Initial Revision S13	3/20/2013	Eric A.

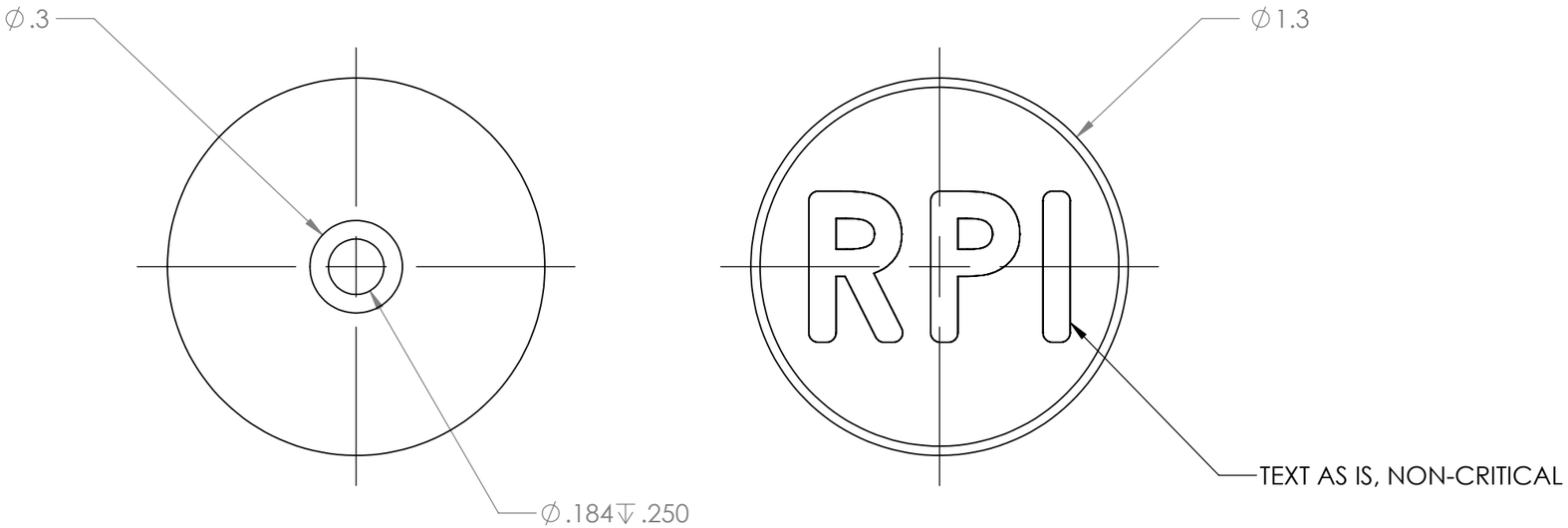

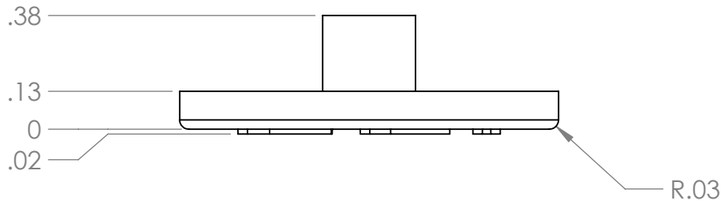

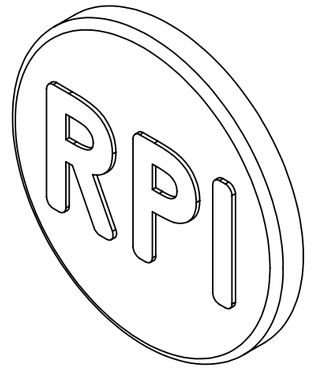

DWG NOTES: (UNLESS OTHERWISE NOTED)

1) ALL UNITS: INCHES
2) BREAK ALL SHARP EDGES
3) REMOVE ALL FLASHING & RUNNERS

MATERIAL: Polypropylene (RED)

TOLERANCES (UNLESS NOTED)

DECIMAL: X.X : ±0.015
X.XX : ±0.01
X.XXX : ±0.005

FRACTIONAL: ±1/32

NO. PARTS REQ'D: 403

RENSSELAER POLYTECHNIC INSTITUTE

Axle Pin
(Part #: 14)

DRAWN BY: Patrick E. Pilvines
E-MAIL: pilvip@rpi.edu **PHONE:** (339) 364 - 1707
FACULTY ADVISOR: Samuel Chiaponne **CHECKED:** PEP

SIZE B | **COURSE NAME/NUMBER:** MP&S Ferris Wheel Team | SECTION D
DATE: Wednesday, March 20, 2013 7:46:51 PM
SCALE 2:1 | CAD FILE: 12CandyA_AxlePin14_C_041206 | SHEET 1 OF 1

REV.	DESCRIPTION	DATE	APPROVED
A	Initial Revision S13	3/20/2013	Eric A.
B	Updated channel dimension to reflect requied tolerances for pressing into lower base		

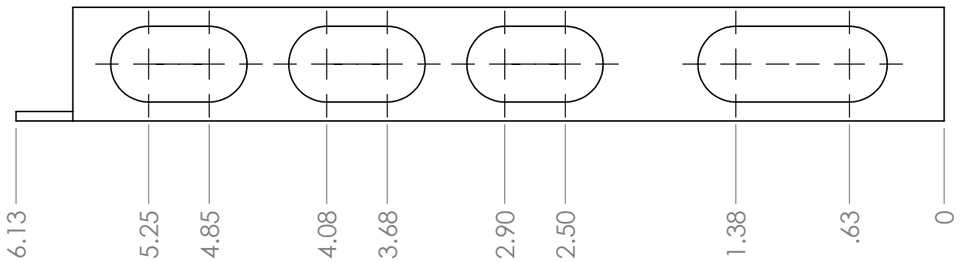

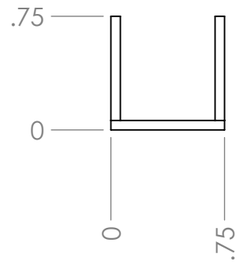

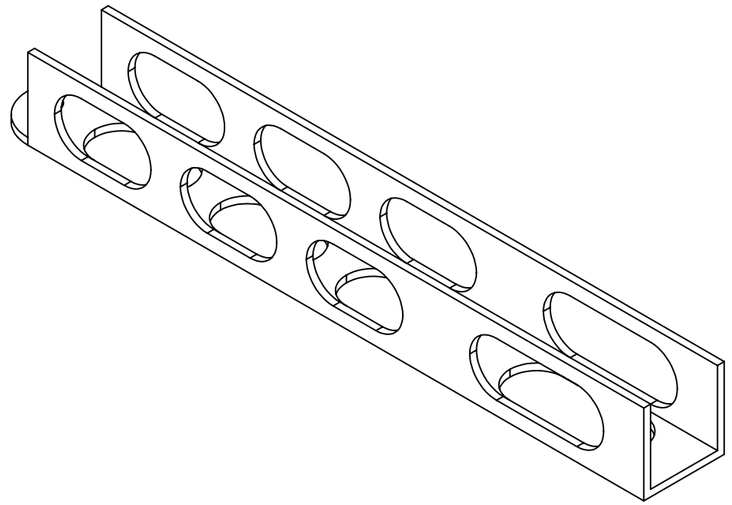

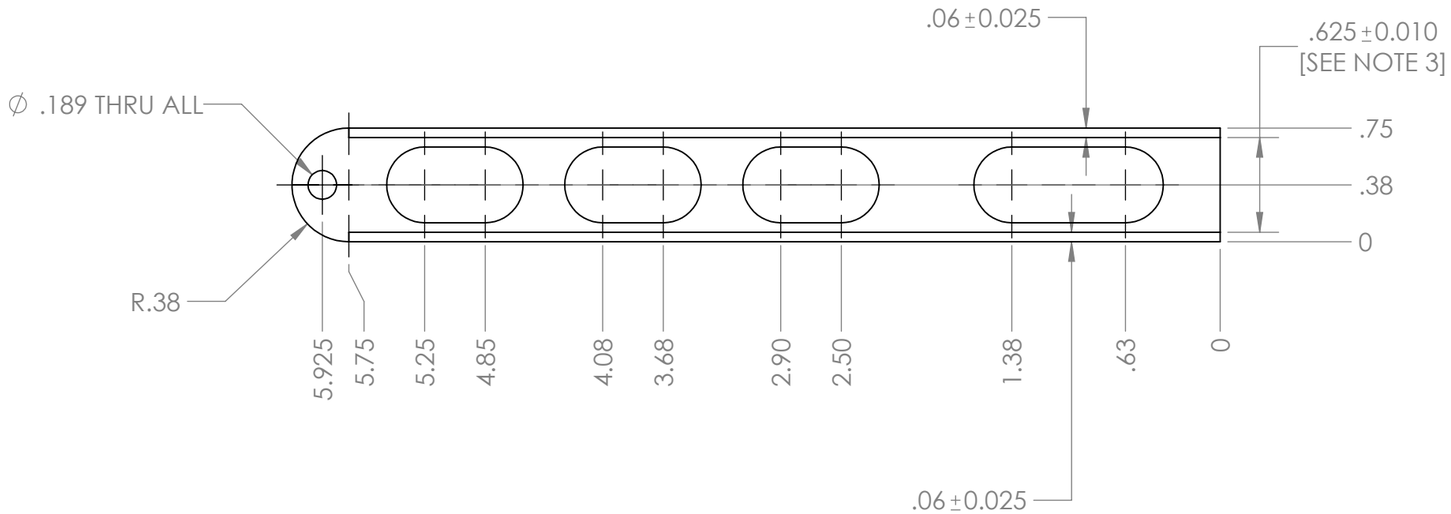

DWG NOTES: (UNLESS OTHERWISE NOTED)

1) ALL UNITS: INCHES
2) BREAK ALL SHARP EDGES
3) SLOT BOTTOM 1/2" OF BACK SUPPORT WITH 5/8" END MILL TO ENSURE PROPER FIT INTO LOWER BASE
4) TUMBLE PART FOR 2 HOURS TO ACHIEVE SURFACE FINISH

MATERIAL: 6063 Aluminum

TOLERANCES (UNLESS NOTED)

DECIMAL: X.X : ±0.015, X.XX : ±0.01, X.XXX : ±0.005

FRACTIONAL: ±1/32

NO. PARTS REQ'D: 403

RENSSELAER POLYTECHNIC INSTITUTE

Back Support (Part #: 06)

DRAWN BY: Patrick E. Pilvines

E-MAIL: pilvip@rpi.edu **PHONE:** (339) 364 - 1707

FACULTY ADVISOR: Samuel Chiaponne **CHECKED:** PEP

SIZE B | **COURSE NAME/NUMBER:** MP&S Ferris Wheel Team | SECTION D

DATE: Wednesday, March 20, 2013 7:50:23 PM

SCALE 1:1 | CAD FILE: 12CandyA_BackSupport06_C_071108 | SHEET 1 OF 1

REV.	DESCRIPTION	DATE	APPROVED
A	Initial Revision S13	3/20/2013	Eric A.

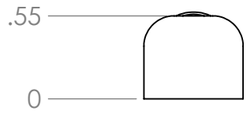

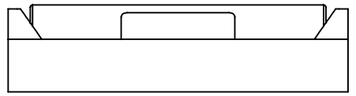

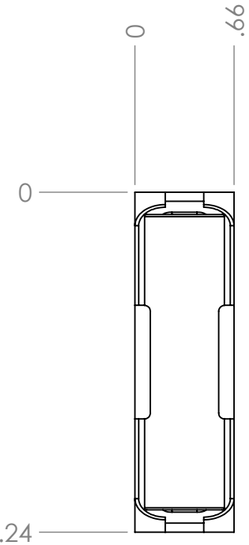

DWG NOTES: (UNLESS OTHERWISE NOTED)

1) ALL UNITS: INCHES
2) ALL NON-STATED DIMENSIONS NON-CRITICAL, USE AS IS
3) TRIM ALL LEADS ACCORDING TO S.O.P.

MATERIAL: PURCHASED PART

TOLERANCES (UNLESS NOTED)

DECIMAL: X.X : ±0.015
X.XX : ±0.01
X.XXX : ±0.005

FRACTIONAL: ±1/32

NO. PARTS REQ'D: 403

RENSSELAER POLYTECHNIC INSTITUTE

Battery Mount
(Part #: 12)

DRAWN BY: Patrick E. Pilvines

E-MAIL: pilvip@rpi.edu **PHONE:** (339) 364 - 1707

FACULTY ADVISOR: Samuel Chiaponne **CHECKED:** PEP

SIZE B | **COURSE NAME/NUMBER:** MP&S Ferris Wheel Team | SECTION D

DATE: Wednesday, March 20, 2013 8:34:23 PM

SCALE 2:1 | CAD FILE: 12CandyA_BatteryMount12_PC_021107 | SHEET 1 OF 1

REV.	DESCRIPTION	DATE	APPROVED
A	Initial Issue of Drawing	5/7/2013	Eric A.

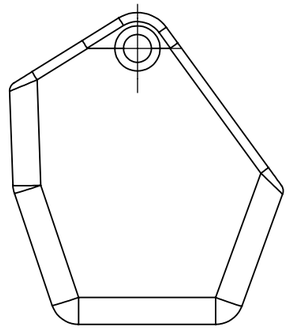

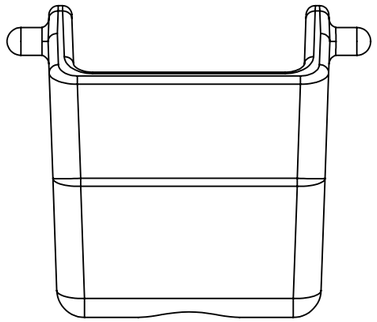

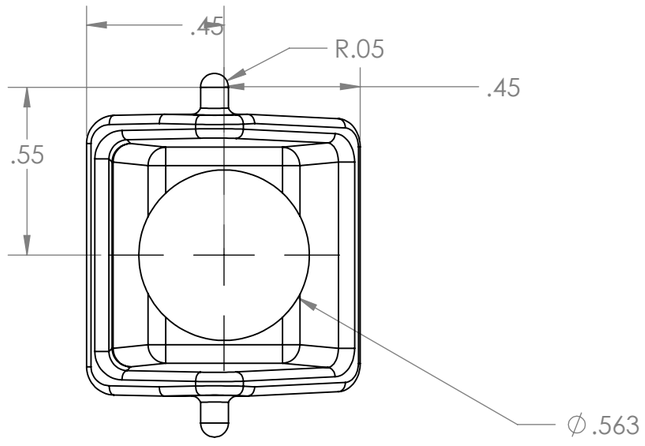

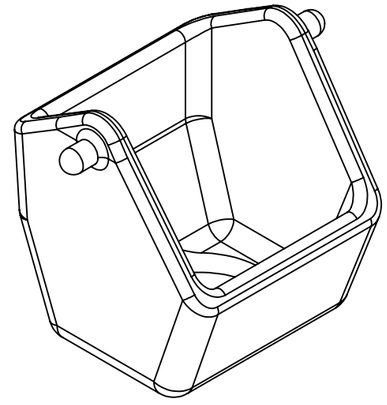

DWG NOTES: (UNLESS OTHERWISE NOTED)

1) ALL UNITS: INCHES
2) PART IDENTICAL TO PART 1, SEE DRAWING FOR DIMENSIONS
3) THIS IS A MODIFICATION TO PART 1, DRILL HOLE IN BOTTOM OF 400 OF PART 1

MATERIAL: RED POLYPROPYLENE

TOLERANCES (UNLESS NOTED)

DECIMAL: X.X : ±0.015, X.XX : ±0.01, X.XXX : ±0.005

FRACTIONAL: ±1/32

NO. PARTS REQ'D: 400

RENSSELAER POLYTECHNIC INSTITUTE

Candy Cart (Part 24)

DRAWN BY: Patrick Pilvines

E-MAIL: pilvip@rpi.edu **PHONE:** (339) 364 - 1707

FACULTY ADVISOR: Samuel Chiaponne **CHECKED:** PEP

SIZE B | **COURSE NAME/NUMBER:** MP&S Ferris Wheel Team | SECTION D

DATE: Tuesday, May 07, 2013 10:52:01 AM

SCALE 2:1 | CAD FILE: 12CandyA_CandyCart23_C_010502 | SHEET 1 OF 1

REV.	DESCRIPTION	DATE	APPROVED
A	Initial Revision S13	3/20/13	Eric A.
B	Updated Flash removal & new dimesnions on part	5/7/2013	Eric A.

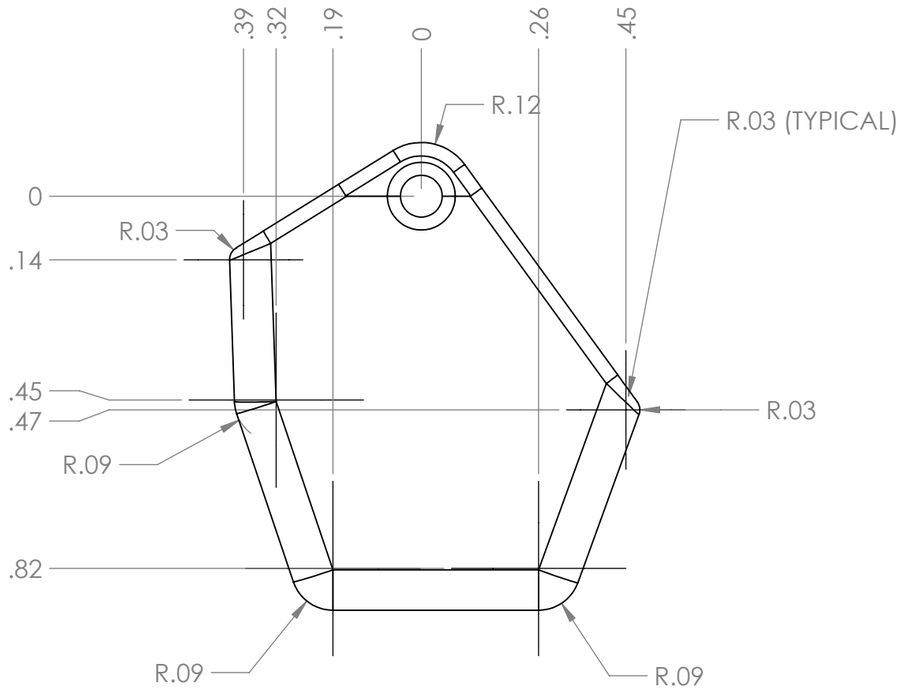

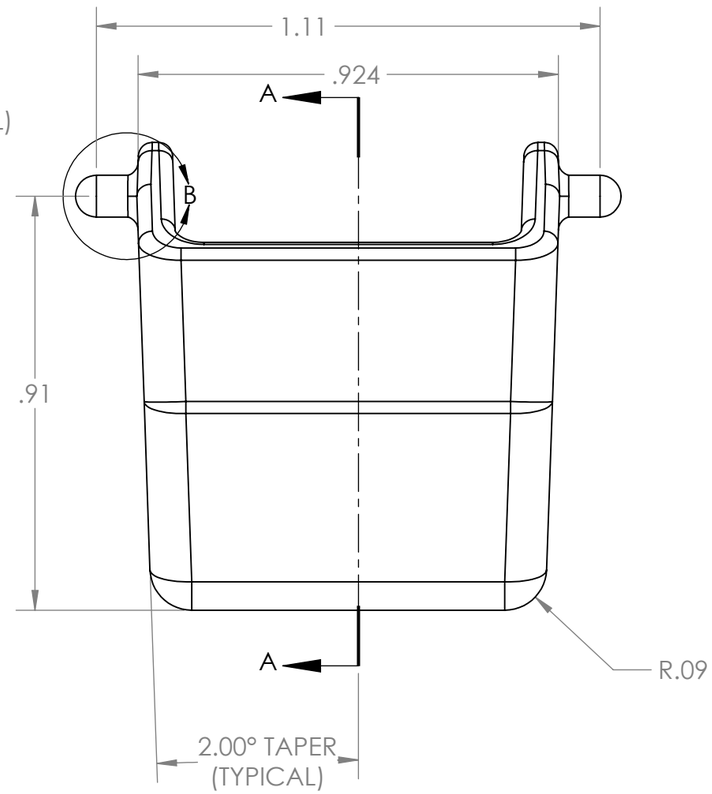

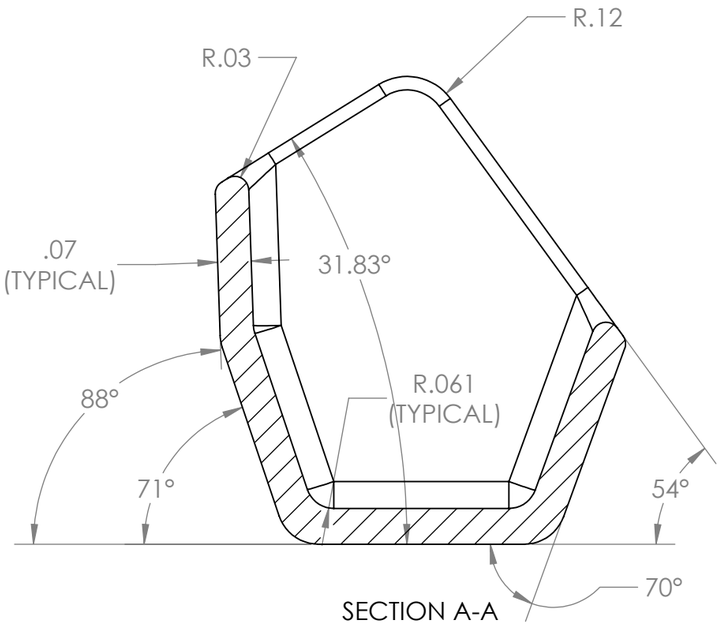

SECTION A-A

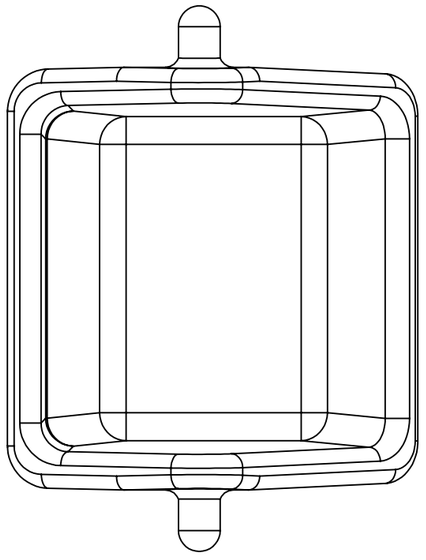

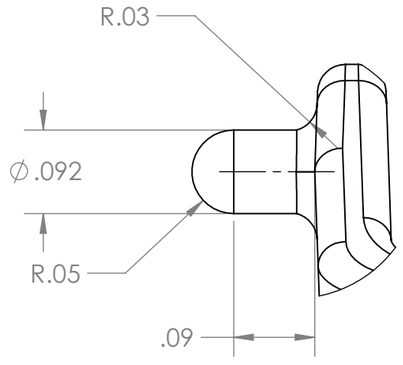

DETAIL B
SCALE 6 : 1

DWG NOTES: (UNLESS OTHERWISE NOTED)

1) ALL UNITS: INCHES
2) BREAK ALL SHARP EDGES
3) REMOVE ALL FLASHING & RUNNER, ESPECIALLY FROM PIN AREA AND FRONT/BACK OF CARTS, SEE SOP FOR DETAILS

MATERIAL: Polypropylene (RED)

TOLERANCES (UNLESS NOTED)

DECIMAL: X.X : ±0.015
X.XX : ±0.01
X.XXX : ±0.005

FRACTIONAL: ±1/32

NO. PARTS REQ'D: 3224

RENSSELAER POLYTECHNIC INSTITUTE

Cart
(Part #: 01)

DRAWN BY: Patrick E. Pilvines

E-MAIL: pilvip@rpi.edu **PHONE:** (339) 364 - 1707

FACULTY ADVISOR: Samuel Chiaponne **CHECKED:** PEP

SIZE B | **COURSE NAME/NUMBER:** MP&S Ferris Wheel Team | SECTION D

DATE: Wednesday, March 20, 2013 8:38:21 PM

SCALE 3:1 | CAD FILE: 12CandyA_Cart01_C_010904 | SHEET 1 OF 1

REV.	DESCRIPTION	DATE	APPROVED
A	Initial Revision S13	3/20/2013	Eric A.
B	Updated Tolerancing & Also nots about flash removal	5/7/2013	Eric A.

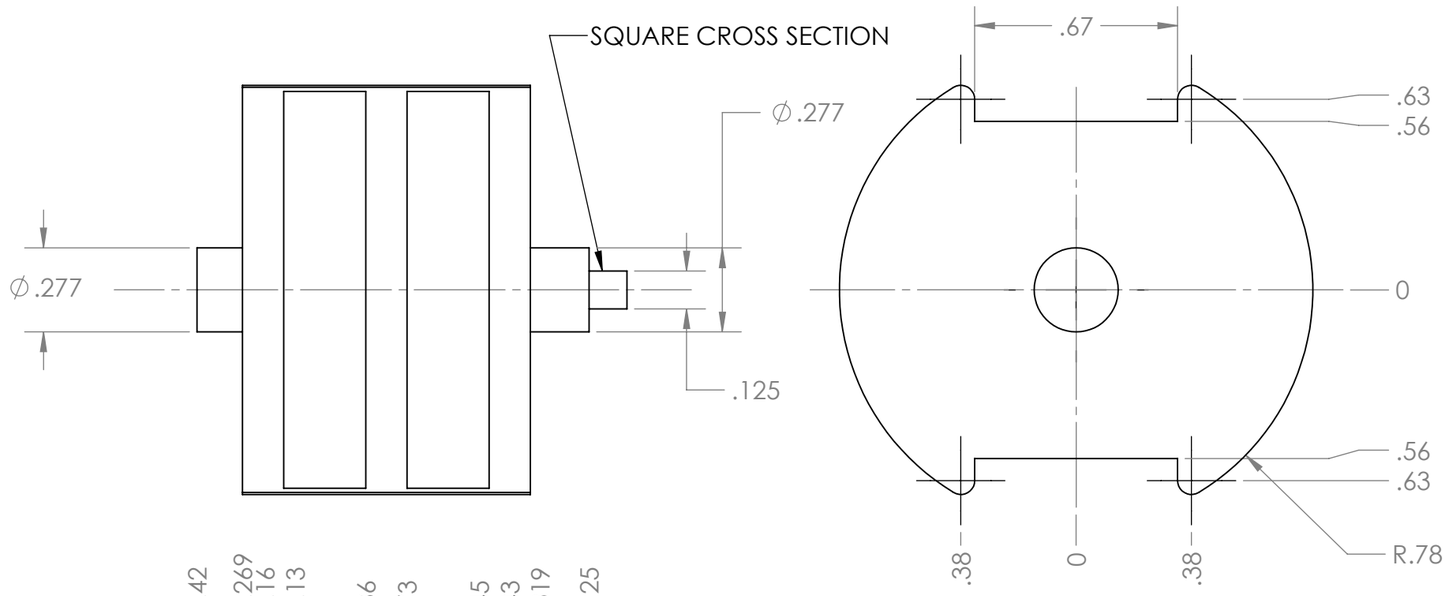

SECTION A-A

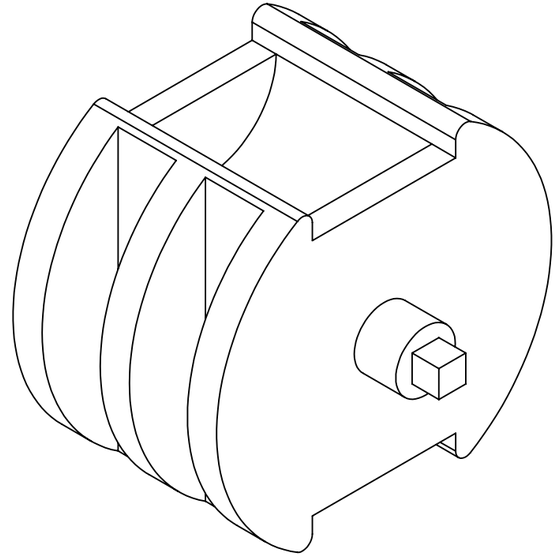

DWG NOTES: (UNLESS OTHERWISE NOTED)

1) ALL UNITS: INCHES
2) BREAK ALL SHARP EDGES
3) REMOVE ALL FLASH & RUNNER FROM PART
4) ENSURE PROPER FIT INTO STRUTS BEFORE ASSEMBLY

MATERIAL: Polypropylene (RED)

TOLERANCES (UNLESS NOTED)

DECIMAL: X.X : ±0.015, X.XX : ±0.01, X.XXX : ±0.005

FRACTIONAL: ±1/32

NO. PARTS REQ'D: 403

RENSSELAER POLYTECHNIC INSTITUTE

Doser
(Part #: 10)

DRAWN BY: Patrick E. Pilvines

E-MAIL: pilvip@rpi.edu **PHONE:** (339) 364 - 1707

FACULTY ADVISOR: Samuel Chiaponne **CHECKED:** PEP

SIZE B | **COURSE NAME/NUMBER:** MP&S Ferris Wheel Team | SECTION D

DATE: Wednesday, March 20, 2013 8:53:31 PM

SCALE 2:1 | CAD FILE: 12CandyA_Doser10_C_061112 | SHEET 1 OF 1

REV.	DESCRIPTION	DATE	APPROVED
A	Initial Revision S13	3/20/2013	Eric A.

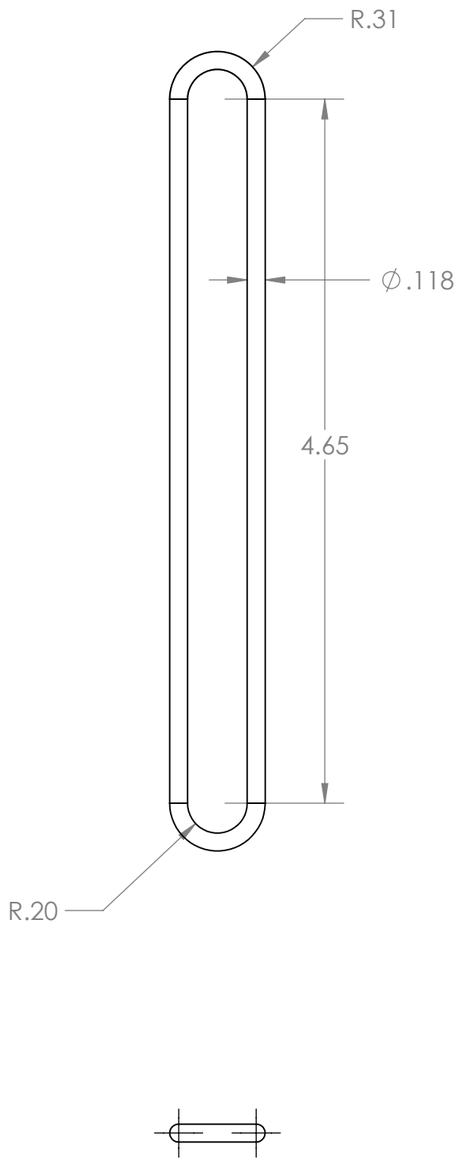

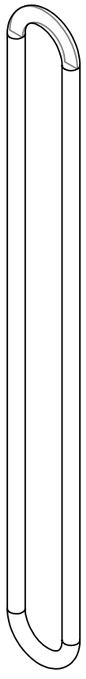

DWG NOTES: (UNLESS OTHERWISE NOTED)
1) ALL UNITS: INCHES
2) BREAK ALL SHARP EDGES

MATERIAL: Rubber (PC)

TOLERANCES (UNLESS NOTED)

DECIMAL: X.X : ±0.015
X.XX : ±0.01
X.XXX : ±0.005

FRACTIONAL: ±1/32

NO. PARTS REQ'D: 403

RENSSELAER POLYTECHNIC INSTITUTE

Drive Belt
(Part #: 08)

DRAWN BY: Patrick E. Pilvines

E-MAIL: pilvip@rpi.edu **PHONE:** (339) 364 - 1707

FACULTY ADVISOR: Samuel Chiaponne **CHECKED:** PEP

SIZE B | **COURSE NAME/NUMBER:** MP&S Ferris Wheel Team | SECTION D

DATE: Wednesday, March 20, 2013 9:04:08 PM

SCALE 1:1 | CAD FILE: 12CandyA_DriveBelt08_PC_011017 | SHEET 1 OF 1

REV.	DESCRIPTION	DATE	APPROVED
A	Initial Revision S13	3/20/2013	Eric A.

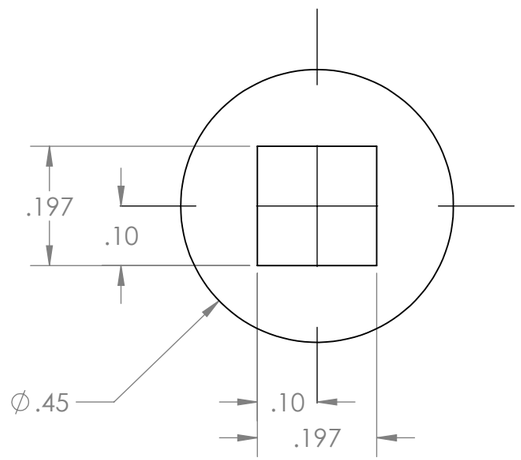

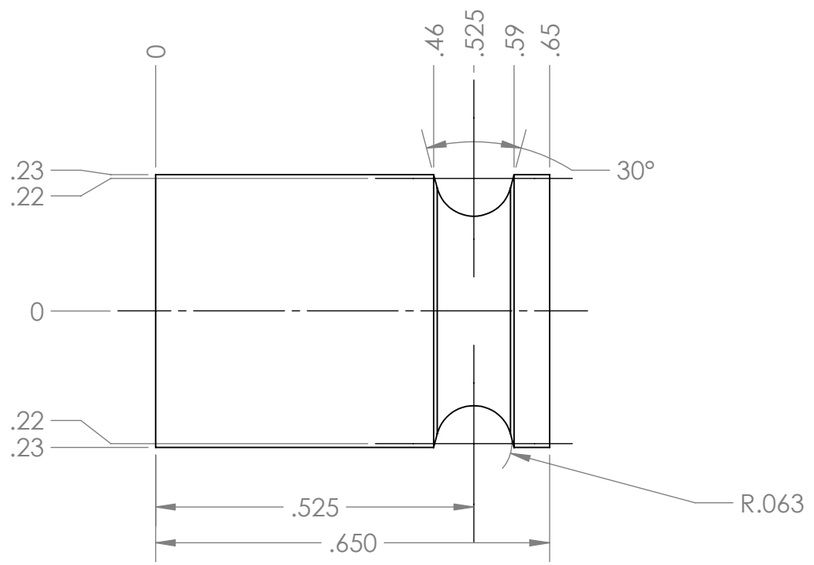

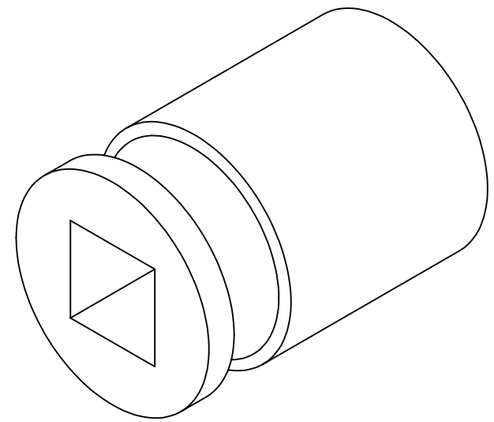

SolidWorks Student Edition.
For Academic Use Only.

DWG NOTES: (UNLESS OTHERWISE NOTED)
1) ALL UNITS: INCHES
2) BREAK ALL SHARP EDGES
3) REMOVE ALL EXCESS FLASHING & RUNNERS

MATERIAL: ABS (BLACK)

TOLERANCES (UNLESS NOTED)

DECIMAL: X.X : ±0.015
X.XX : ±0.01
X.XXX : ±0.005

FRACTIONAL: ±1/32

NO. PARTS REQ'D: 403

RENSSELAER POLYTECHNIC INSTITUTE

Drive Belt Carrier
(Part #: 16)

DRAWN BY: SETH WRAIGHT

E-MAIL: WRAIGS@RPI.EDU **PHONE:** (607)342-1812

FACULTY ADVISOR: Samuel Chiaponne **CHECKED:** PEP

SIZE B | **COURSE NAME/NUMBER:** MP&S Ferris Wheel Team | SECTION D
DATE: Thursday, February 28, 2013 9:50:20 PM

SCALE 4:1 | CAD FILE:12CandyA_DriveBeltCarrier16_C_061108 | SHEET 1 OF 1

REV.	DESCRIPTION	DATE	APPROVED
A	Initial Revision S13	3/20/2013	Eric A.
B	Updated notes on drilling & tab removal	5/7/2013	Eric A.

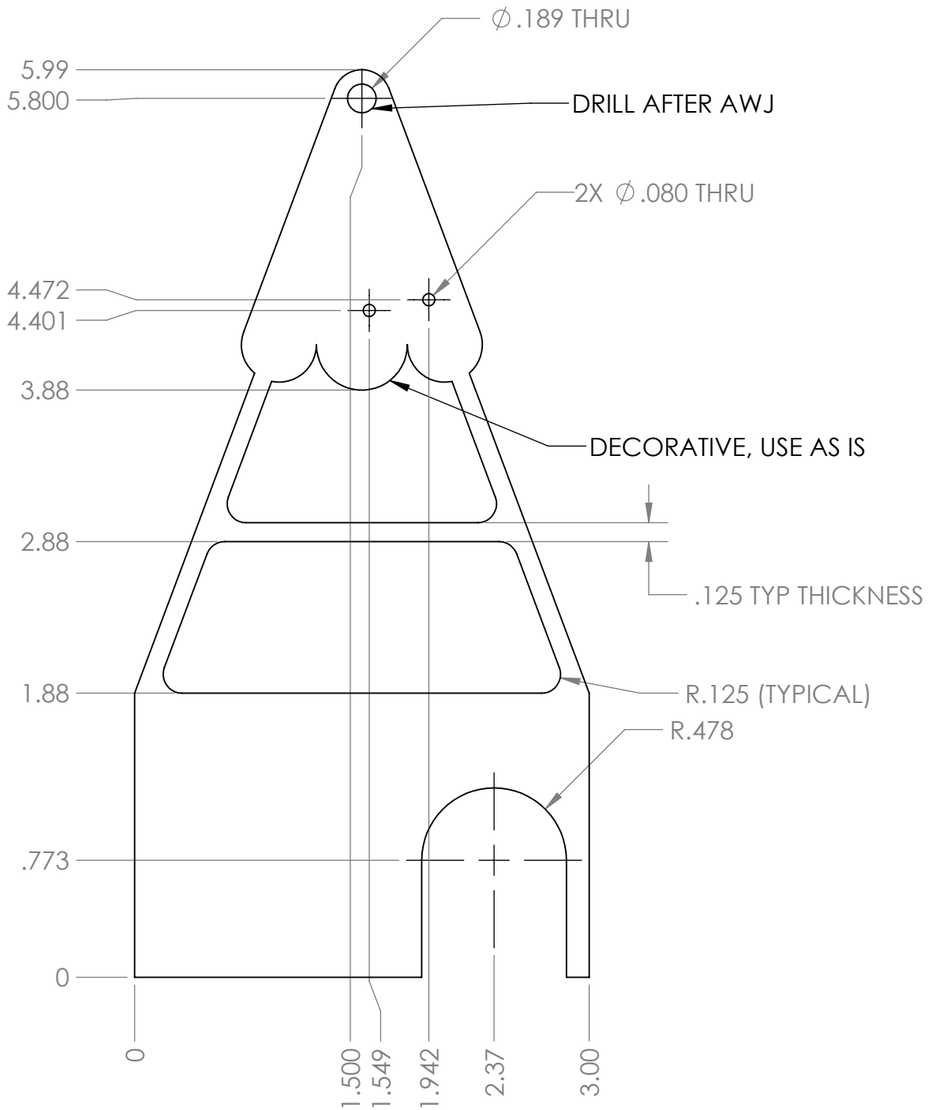

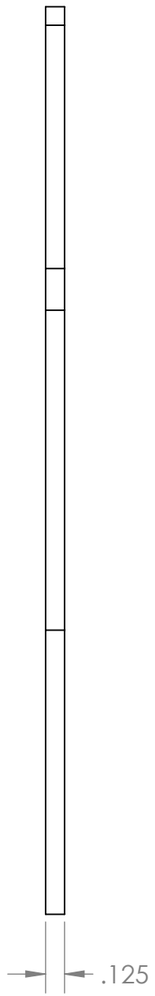

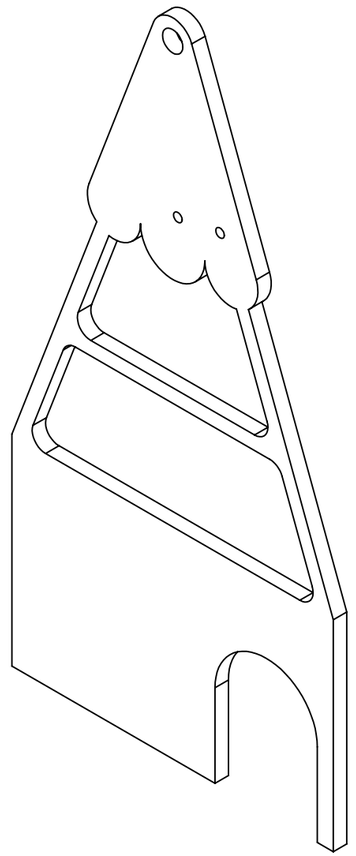

SolidWorks Student Edition.
For Academic Use Only.

DWG NOTES: (UNLESS OTHERWISE NOTED)
1) ALL UNITS: INCHES
2) BREAK ALL SHARP EDGES
3) FILE/REMOVE TABS FROM AWJ (NO TAB TO EXTEND OUTSIDE OF 0.010"
4) TUMBLE PART FOR 2 HOURS FOR SURFACE FINISH

MATERIAL: ALUMINUM 6061

TOLERANCES (UNLESS NOTED)
DECIMAL: X.X : ±0.015, X.XX : ±0.01, X.XXX : ±0.005
FRACTIONAL: ±1/32

NO. PARTS REQ'D: 403

RENSSELAER POLYTECHNIC INSTITUTE

Front Support (Part #: 05)

DRAWN BY: SETH WRAIGHT
E-MAIL: WRAIGS@RPI.EDU **PHONE:** (607)342-1812
FACULTY ADVISOR: Samuel Chiaponne **CHECKED:** PEP
SIZE B | **COURSE NAME/NUMBER:** MP&S Ferris Wheel Team | SECTION D
DATE: Thursday, February 28, 2013 9:20:48 PM
SCALE 1:1 | CAD FILE: 12CandyA_FrontSupport05_C_031108 | SHEET 1 OF 1

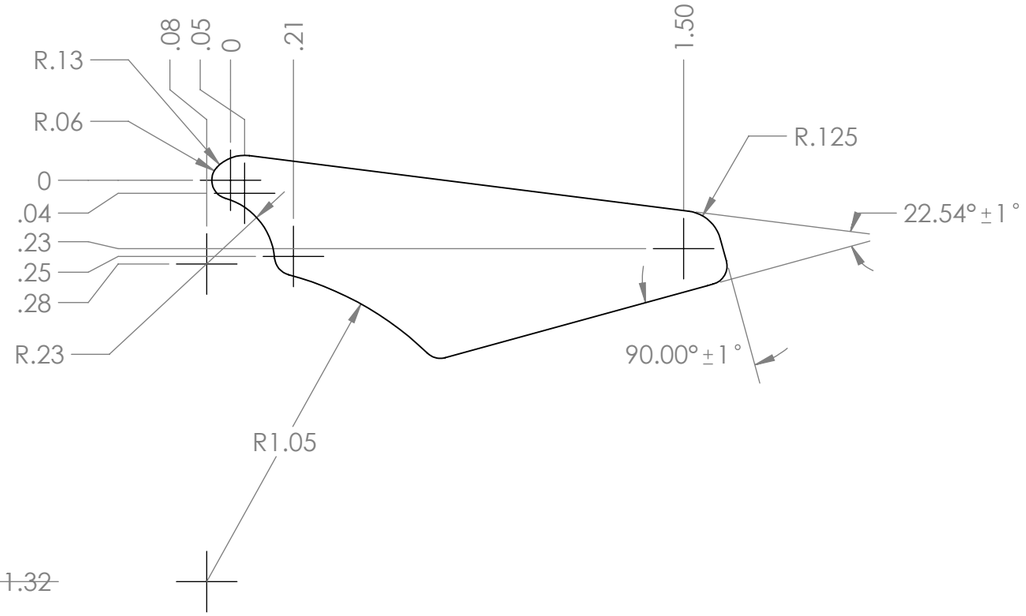

REV.	DESCRIPTION	DATE	APPROVED
A	Initial Issue of Drawing	5/7/2013	Eric A.

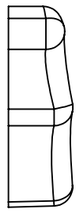

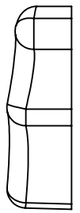

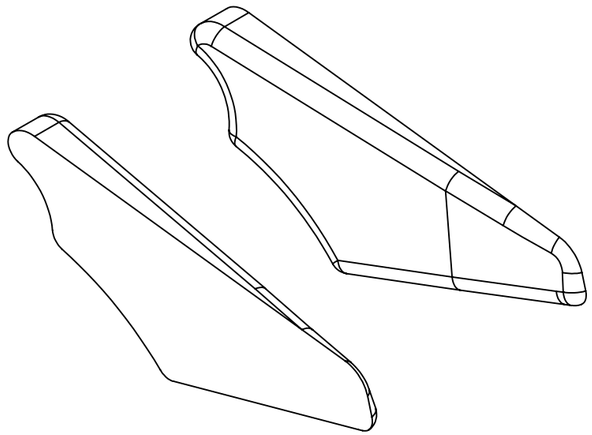

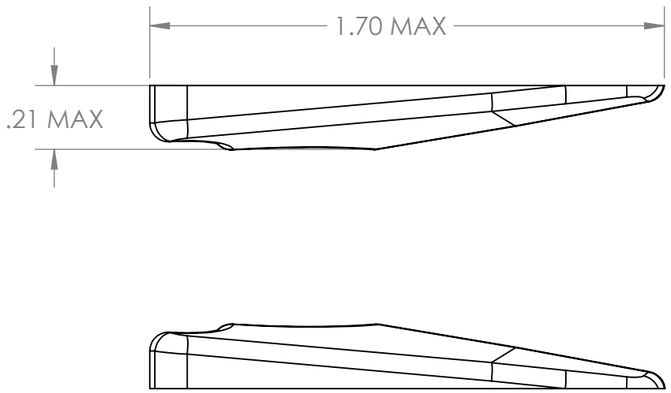

DWG NOTES: (UNLESS OTHERWISE NOTED)

1) ALL UNITS: INCHES
2) INJECT ON PIM, MACHINE PER 3D PART
3) REMOVE ALL FLASH & RUNNER
4) 1 PART IS BOTH THE LEFT & RIGHT SIDE, MIRRORED IMAGES (21a - LEFT SIDE, 21b - RIGHT SIDE)

MATERIAL: BLACK ABS

TOLERANCES (UNLESS NOTED)

DECIMAL: X.X : ±0.015
X.XX : ±0.01
X.XXX : ±0.005

FRACTIONAL: ±1/32

NO. PARTS REQ'D: 400

RENSSELAER POLYTECHNIC INSTITUTE

Funnel
(Part #: 21a & 21b)

DRAWN BY: Patrick Pilvines

E-MAIL: pilvip@rpi.edu **PHONE:** (339) 364 - 1707

FACULTY ADVISOR: Samuel Chiappone **CHECKED:** PEP

SIZE B | **COURSE NAME/NUMBER:** MP&S Ferris Wheel Team | SECTION D

DATE: Tuesday, May 07, 2013 11:00:51 AM

SCALE 2:1 | CAD FILE: 12CandyA_Funnel20_C_01.SLDPRT | SHEET 1 OF 1

REV.	DESCRIPTION	DATE	APPROVED
A	Initial Revision S13	3/20/2013	Eric A.
B	Add cross section of square axle & updated tolerances	5/7/2013	Eric A.

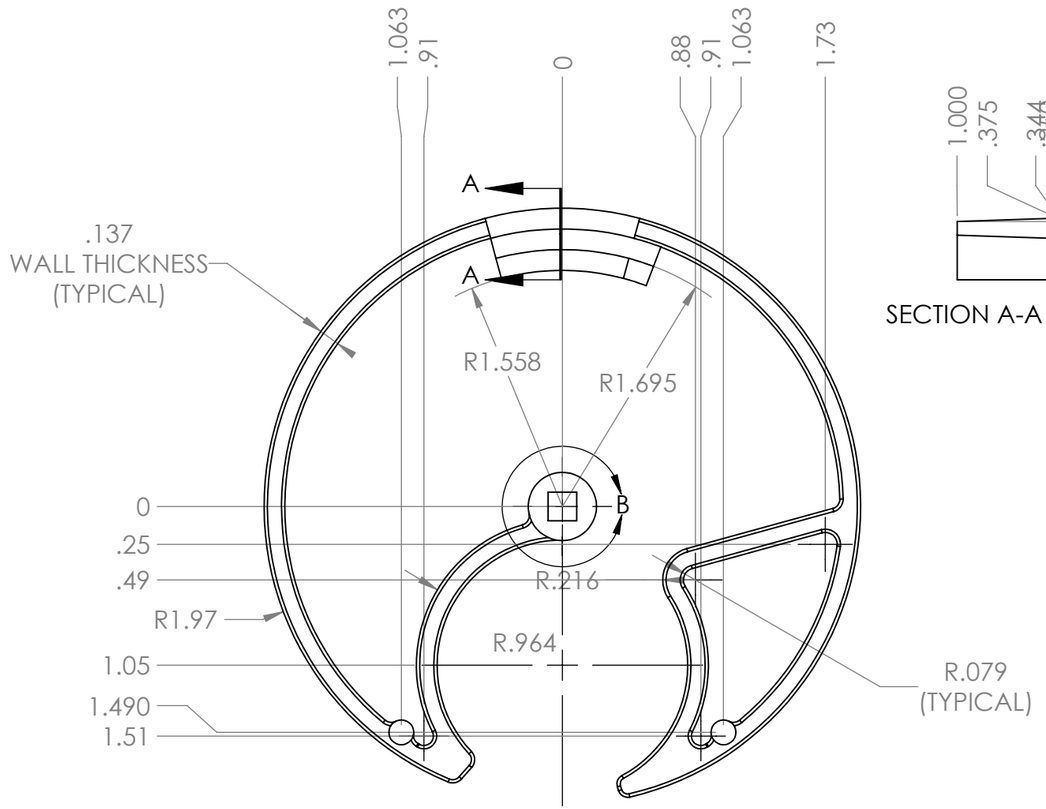

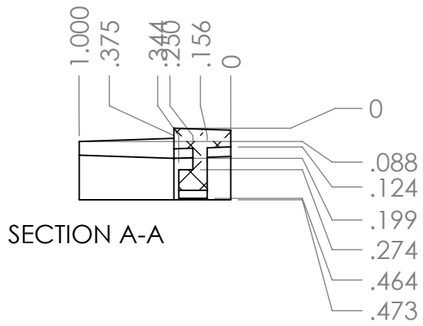

SECTION A-A

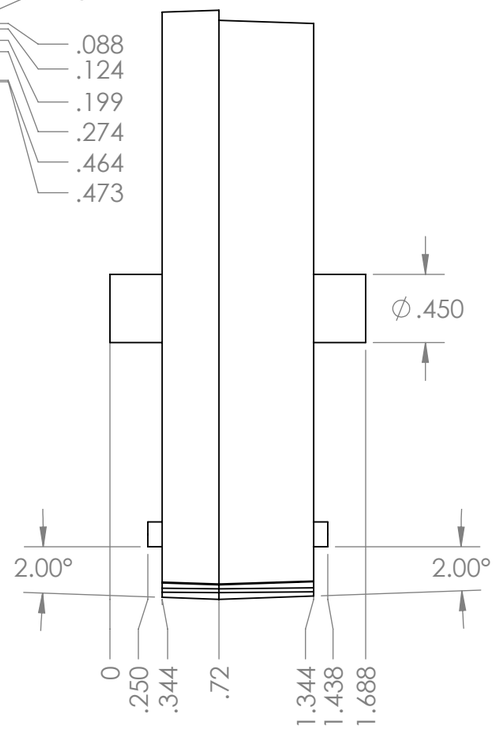

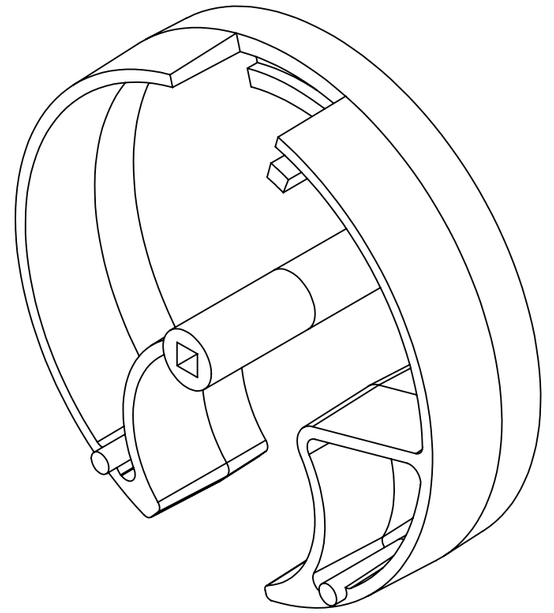

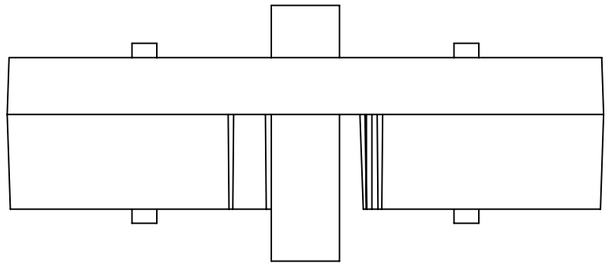

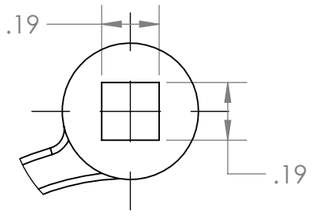

DETAIL B
SCALE 2 : 1

DWG NOTES: (UNLESS OTHERWISE NOTED)

1) ALL UNITS: INCHES
2) BREAK ALL SHARP EDGES
3) REMOVE ALL FLASHING & RUNNERS
4) CARTS MAY BIND ON JAR DURING OPERATION, IF SO REMOVE MATERIAL FROM CART BEFORE REMOVING JAR

MATERIAL: ABS (BLACK)

TOLERANCES (UNLESS NOTED)

DECIMAL: X.X : ±0.015
X.XX : ±0.01
X.XXX : ±0.005

FRACTIONAL: ±1/32

NO. PARTS REQ'D: 403

RENSSELAER POLYTECHNIC INSTITUTE

Jar
(Part #: 04)

DRAWN BY: Patrick E. Pilvines

E-MAIL: pilvip@rpi.edu **PHONE:** (339) 364 - 1707

FACULTY ADVISOR: Samuel Chiaponne **CHECKED:** PEP

SIZE B | **COURSE NAME/NUMBER:** MP&S Ferris Wheel Team | SECTION D

DATE: Wednesday, March 20, 2013 9:33:04 PM

SCALE 1:1 | CAD FILE: 12CandyA_Jar04_C_021017 | SHEET 1 OF 1

REV.	DESCRIPTION	DATE	APPROVED
A	Initial Revision	3/20/2013	Eric A.
B	Added note about using hot plate as required to ensure part tolerance	5/7/2013	Eric A.

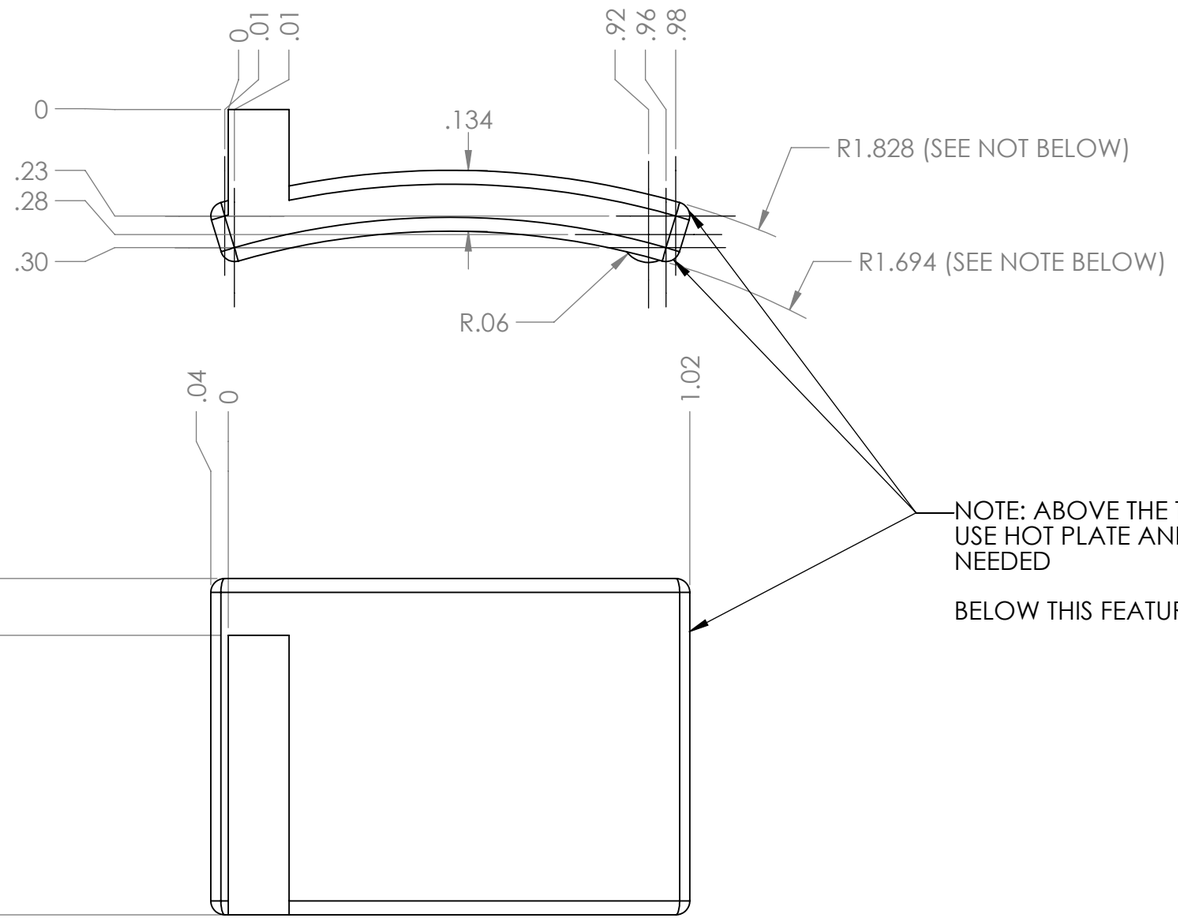

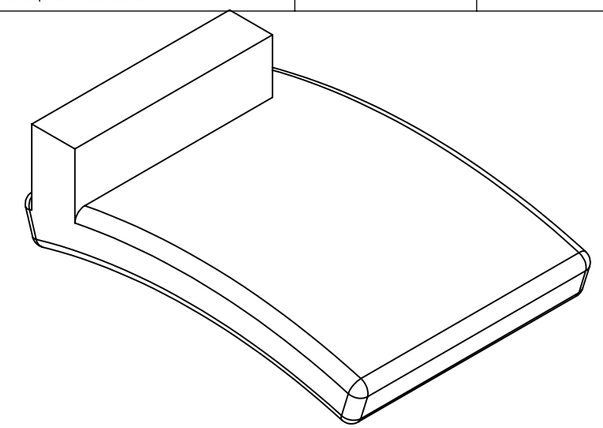

SCALE 3:1

NOTE: ABOVE THE TAB, THE WALL THICKNESS & ID & OD ARE +/- 0.005", USE HOT PLATE AND GROOVED ALUMINUM STOCK TO REDUCE THIS SIZE AS NEEDED

BELOW THIS FEATURE, FEATURE NON-CRITICAL, TOLERANCES +/- 0.030"

DWG NOTES: (UNLESS OTHERWISE NOTED)

1) ALL UNITS: INCHES
2) BREAK ALL SHARP EDGES
3) REMOVE ALL FLASHING & RUNNERS
4) USE HOT PLATE AS NEEDED TO ENSURE ID & OD ARE WITHIN TOLERANCE (SEE ABOVE NOTE ON SHEET)

MATERIAL: Polypropylene (RED)

TOLERANCES (UNLESS NOTED)

DECIMAL: X.X : ±0.015, X.XX : ±0.01, X.XXX : ±0.005

FRACTIONAL: ±1/32

NO. PARTS REQ'D: 403

RENSSELAER POLYTECHNIC INSTITUTE

Jar Lid (Part #: 02)

DRAWN BY: Patrick E. Pilvines

E-MAIL: pilvip@rpi.edu **PHONE:** (339) 364 - 1707

FACULTY ADVISOR: Samuel Chiaponne **CHECKED:** PEP

SIZE B | **COURSE NAME/NUMBER:** MP&S Ferris Wheel Team | SECTION D

DATE: Friday, October 12, 2012 3:54:21 PM

SCALE 3:1 | CAD FILE: 12CandyA_JarLid02_C_021010 | SHEET 1 OF 1

REV.	DESCRIPTION	DATE	APPROVED
A	Initial Issue of Drawing	5/7/2013	Eric A.

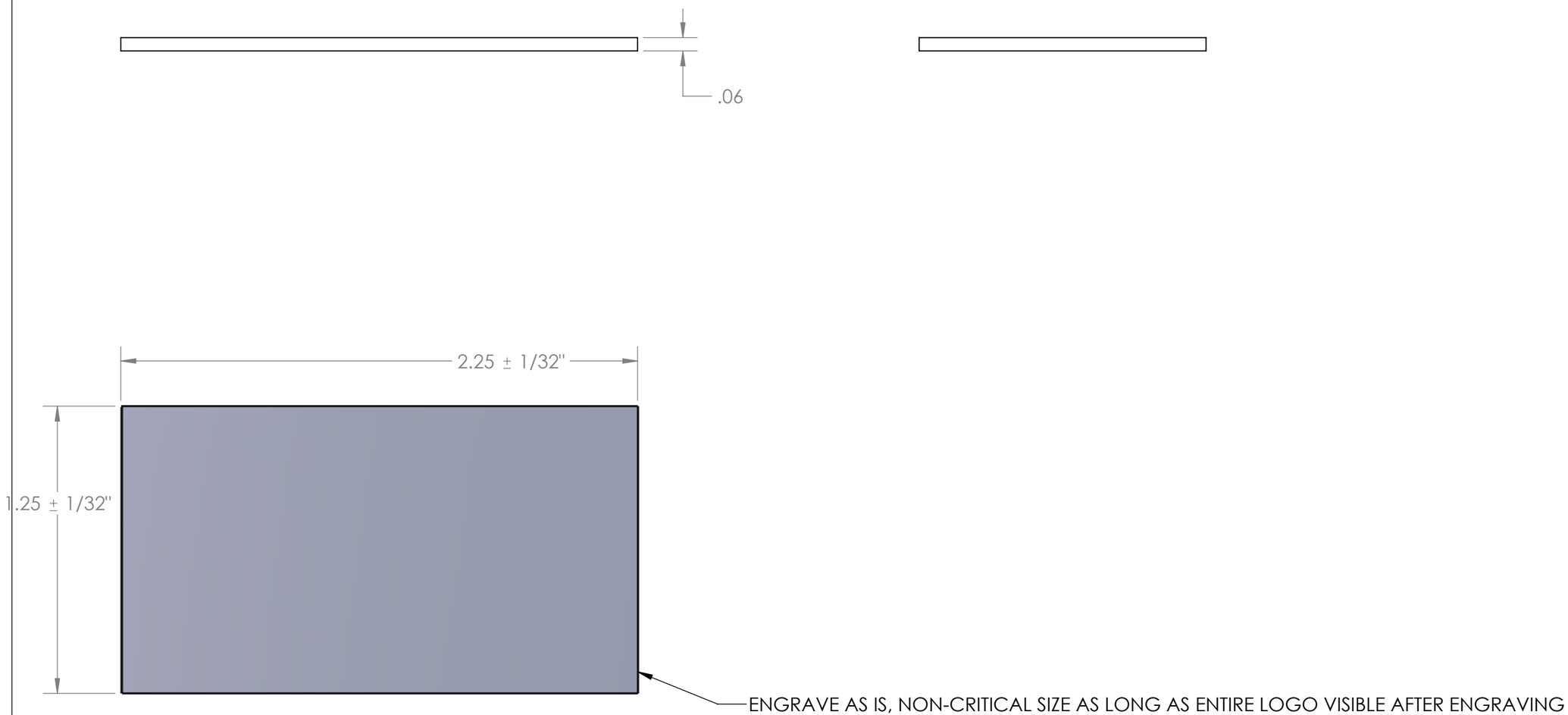

DWG NOTES: (UNLESS OTHERWISE NOTED)

1) ALL UNITS: INCHES
2) CLEAN PART OF POWDER FROM LASER CUTTING PROCESS
3) USE STOCK AS AVAILABLE, COLOR NON-CRITICAL

MATERIAL: MULTI-LAYER PLASTIC

TOLERANCES (UNLESS NOTED)

DECIMAL: X.X : ±0.015
X.XX : ±0.01
X.XXX : ±0.005

FRACTIONAL: ±1/32

NO. PARTS REQ'D: 400

RENSSELAER POLYTECHNIC INSTITUTE

Logo Plate
(Part #: 23)

DRAWN BY: Patrick Pilvines

E-MAIL: pilvip@rpi..edu **PHONE:** (339) 364 - 1707

FACULTY ADVISOR: Samuel Chiaponne **CHECKED:** PEP

SIZE **B** **COURSE NAME/NUMBER:** MP&S Ferris Wheel Team SECTION D

DATE: Tuesday, May 07, 2013 10:45:33 AM

SCALE 2:1 CAD FILE: 12CandyA_LogoPlate22_C_31-0502 SHEET 1 OF 1

REV.	DESCRIPTION	DATE	APPROVED
A	Initial Revision 3/20/2013	3/20/2013	Eric A.
B	Added manual drill note, tab removal note & also re-toleranced non-critical features	5/7/2013	Eric A.

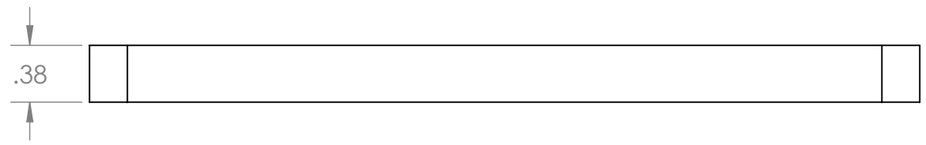

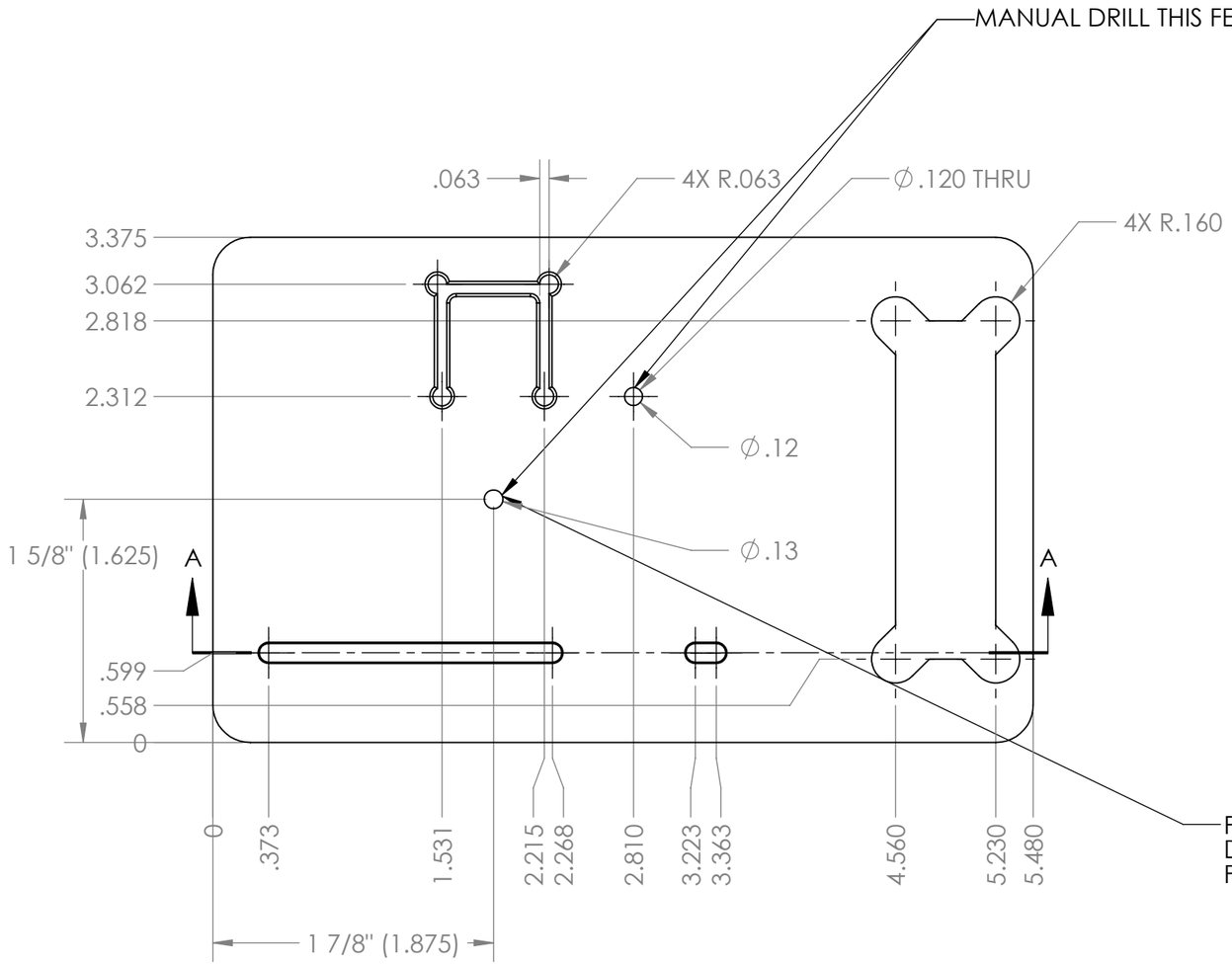

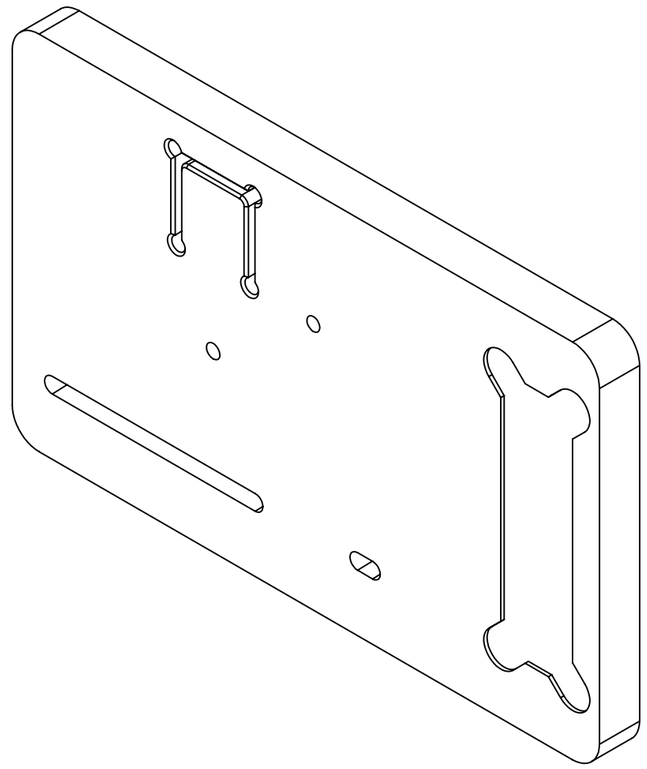

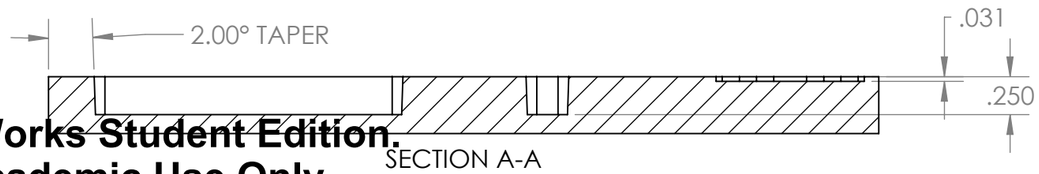

SolidWorks Student Edition.
For Academic Use Only.

DWG NOTES: (UNLESS OTHERWISE NOTED)
1) ALL UNITS: INCHES
2) BREAK ALL SHARP EDGES
3) FILE/REMOVE ALL TABS FROM AWJ

MATERIAL: POLYCARBONATE

TOLERANCES (UNLESS NOTED)

DECIMAL: X.X : ±0.015
X.XX : ±0.01
X.XXX : ±0.005

FRACTIONAL: ±1/32

NO. PARTS REQ'D: 403

RENSSELAER POLYTECHNIC INSTITUTE

Lower Base (Part #: 12)

DRAWN BY: SETH WRAIGHT

E-MAIL: WRAIGS@RPI.EDU **PHONE:** (607)342-1812

FACULTY ADVISOR: Samuel Chiaponne **CHECKED:** PEP

SIZE B | **COURSE NAME/NUMBER:** MP&S A Team | **DATE:** Thursday, February 28, 2013 2:35:23 PM | SECTION D

SCALE 1:1 | CAD FILE: 12CandyA_LowerBase12_C_041112 | SHEET 1 OF 1

REV.	DESCRIPTION	DATE	APPROVED
A	Initial Revision S13	3/20/2013	Eric A.
B	Updated note on flash remove to ignore flashing on teeth to avoid damage to part	5/7/2013	Eric A.

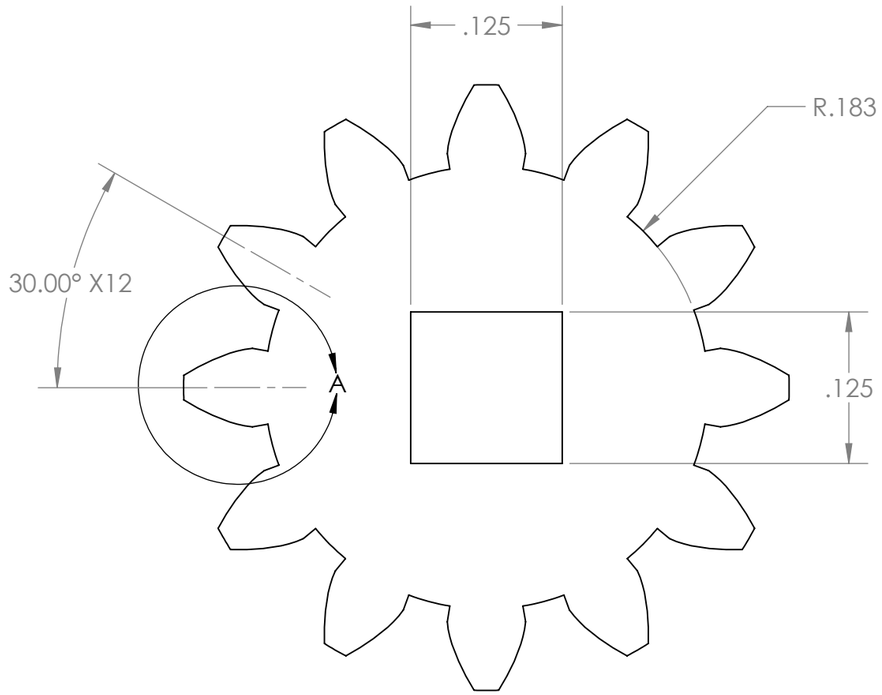

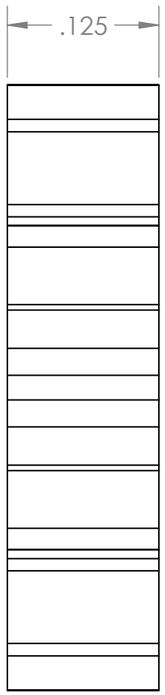

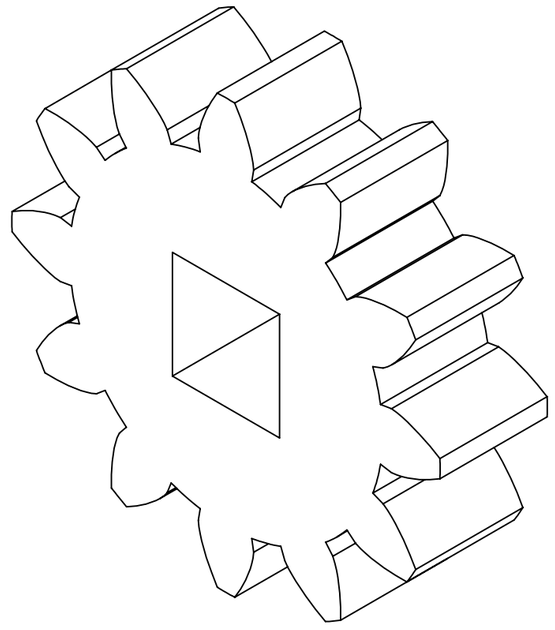

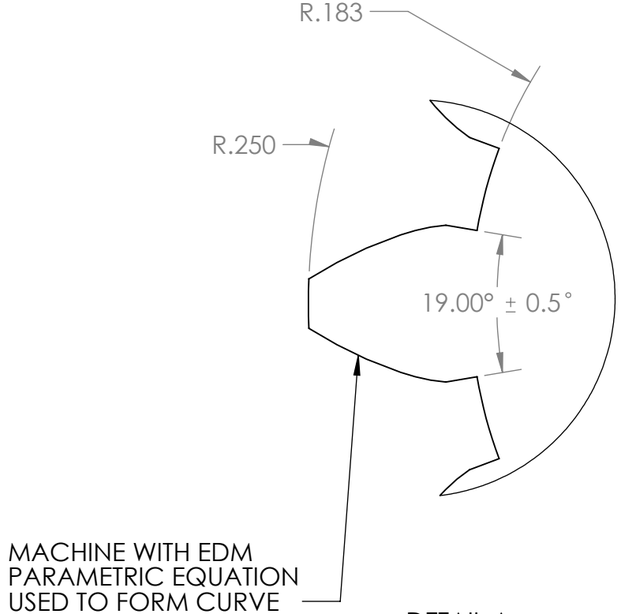

DETAIL A
SCALE 16 : 1

DWG NOTES: (UNLESS OTHERWISE NOTED)

1) ALL UNITS: INCHES
2) BREAK ALL SHARP EDGES
3) REMOVE FLASHING & RUNNERS FROM TOP & BOTTOM, FLASHING ON TEETH SHOULD NOT BE REMOVED (WILL BE WORN AWAY DURING PRODUCT OPERATION)

MATERIAL: ABS (BLACK)

TOLERANCES (UNLESS NOTED)

DECIMAL: X.X : ±0.015
X.XX : ±0.01
X.XXX : ±0.005

FRACTIONAL: ±1/32

NO. PARTS REQ'D: 403

RENSSELAER POLYTECHNIC INSTITUTE

Main Gear
(Part #: 15)

DRAWN BY: Patrick E. Pilvines

E-MAIL: pilvip@rpi.edu **PHONE:** (339) 364 - 1707

FACULTY ADVISOR: Samuel Chiaponne **CHECKED:** PEP

SIZE B | **COURSE NAME/NUMBER:** MP&S Ferris Wheel Team | SECTION D

DATE: Wednesday, March 20, 2013 9:28:14 PM

SCALE 8:1 | CAD FILE: 12CandyA_MainGear15_C_051017 | SHEET 1 OF 1

REV.	DESCRIPTION	DATE	APPROVED
A	Initial Revision S13	3/20/2013	Eric A.

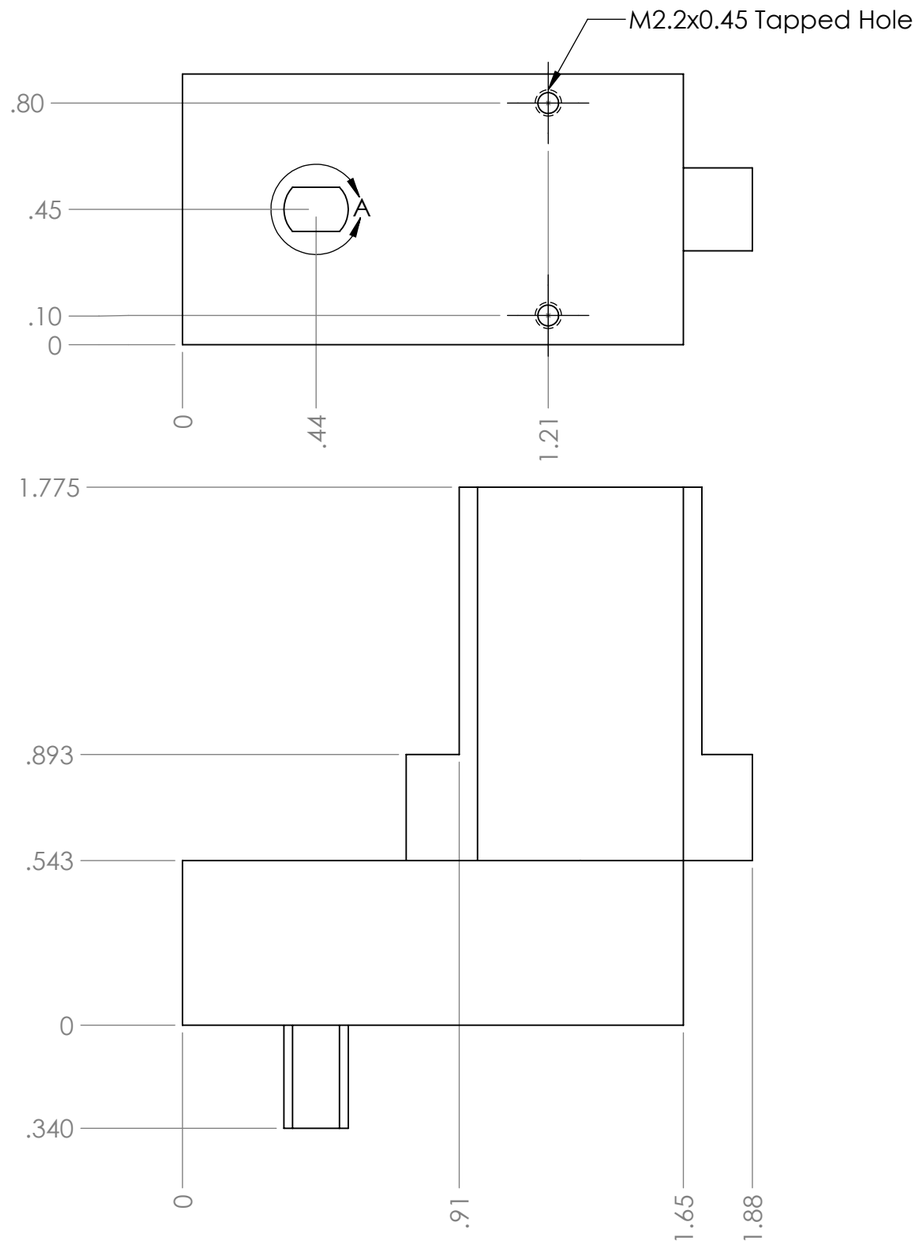

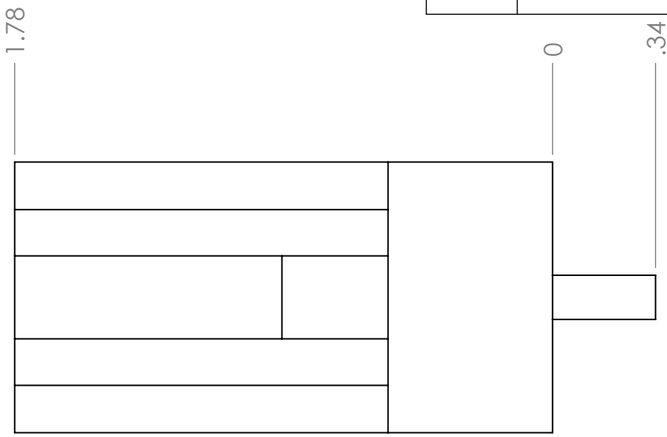

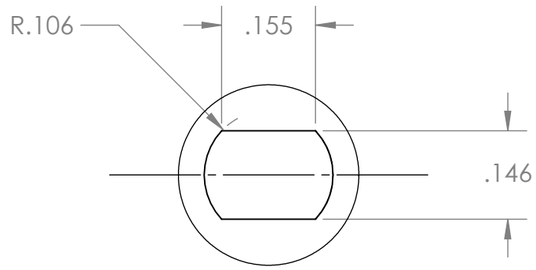

DETAIL A
SCALE 4 : 1

DWG NOTES: (UNLESS OTHERWISE NOTED)

1) ALL UNITS: INCHES
2) BREAK ALL SHARP EDGES
3) REPLACE MOTOR SCREWS WITH Thread-forming screws for sheet metal & iron, 18-8Ss, pan Head Phillips, #4-24, 5/8" Length

MATERIAL: Purchased Component

TOLERANCES (UNLESS NOTED)

DECIMAL: X.X : ±0.015, X.XX : ±0.01, X.XXX : ±0.005

FRACTIONAL: ±1/32

NO. PARTS REQ'D: 403

RENSSELAER POLYTECHNIC INSTITUTE

Motor (Part #: 09)

DRAWN BY: Patrick E. Pilvines

E-MAIL: pilvip@rpi.edu **PHONE:** (339) 364 - 1707

FACULTY ADVISOR: Samuel Chiaponne **CHECKED:** PEP

SIZE B | **COURSE NAME/NUMBER:** MP&S Ferris Wheel Team | SECTION D

DATE: Wednesday, March 20, 2013 9:14:28 PM

SCALE 2:1 | CAD FILE: 12CandyA_Motor09_PC_021108 | SHEET 1 OF 1

REV.	DESCRIPTION	DATE	APPROVED
A	Initial Revision S13	3/20/13	Eric A.
B	Added limits to depth of grooved pulley	5/7/2013	Eric A.

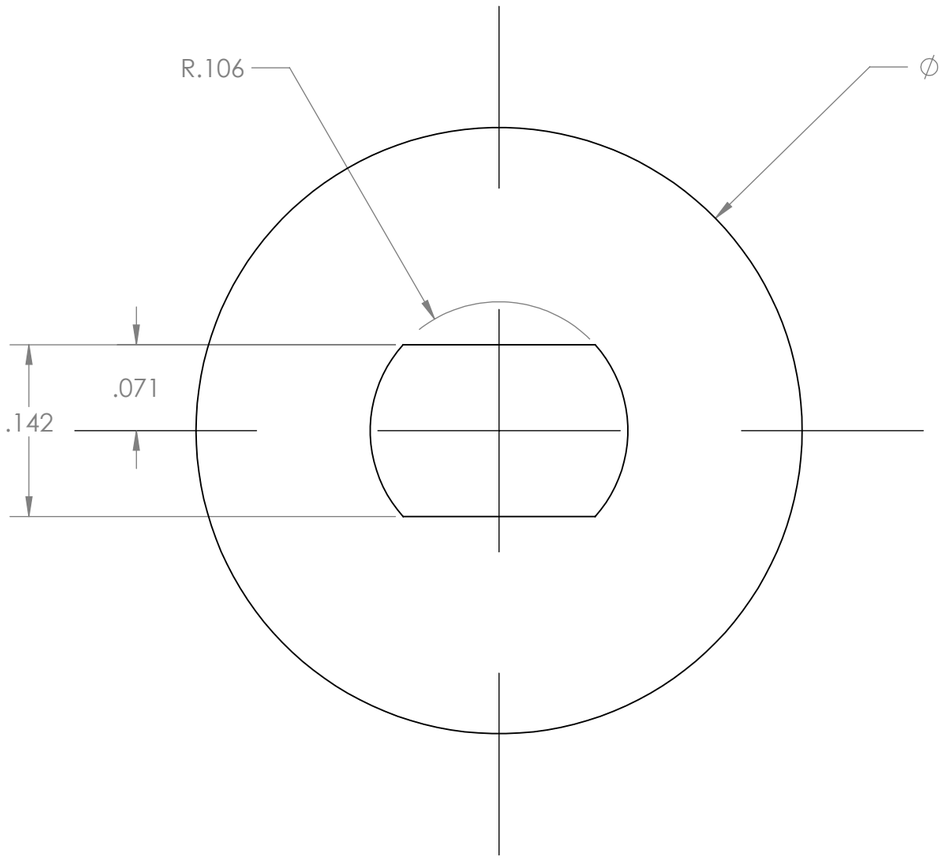

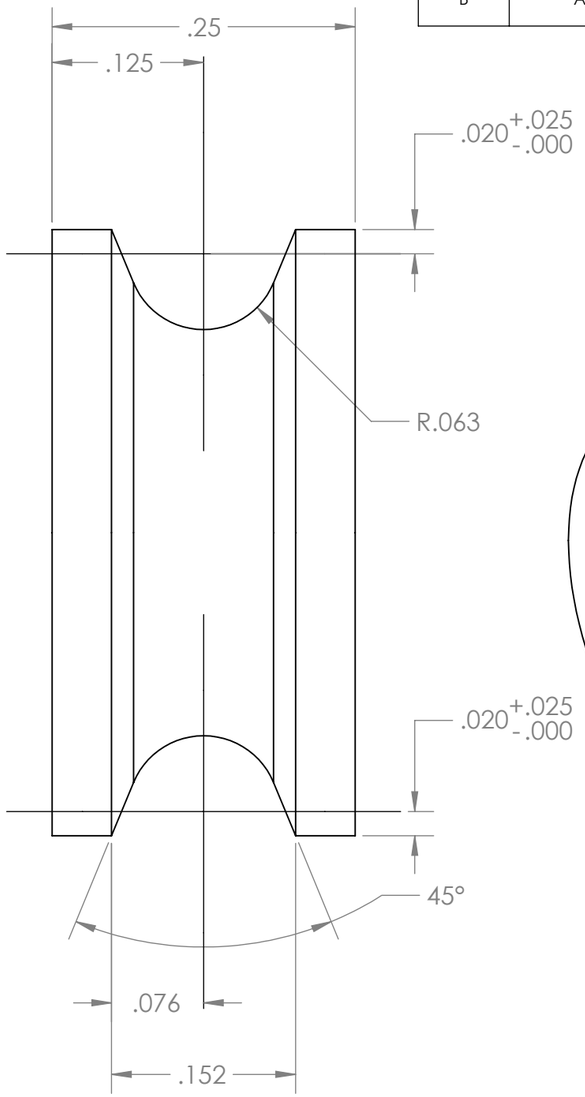

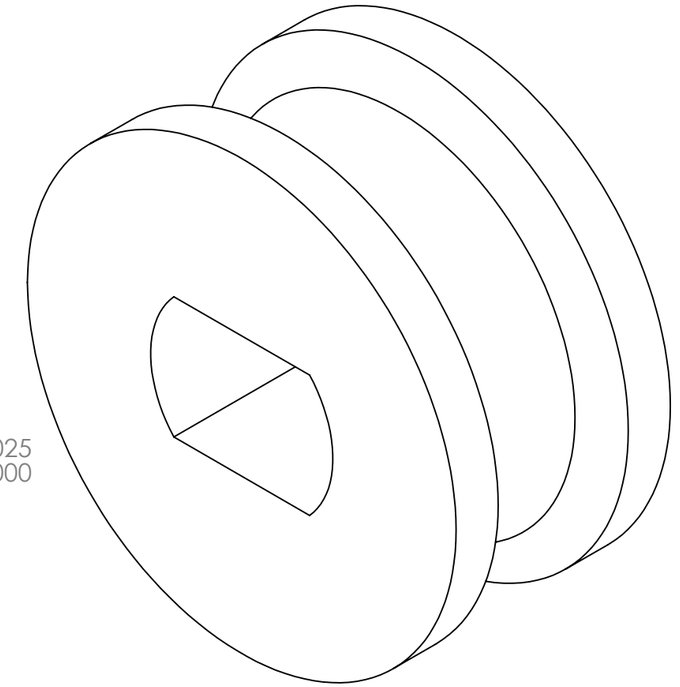

SolidWorks Student Edition.
For Academic Use Only.

DWG NOTES: (UNLESS OTHERWISE NOTED)
1) ALL UNITS: INCHES
2) BREAK ALL SHARP EDGES
3) REMOVE ALL FLASHING & RUNNERS

MATERIAL: ABS (BLACK)

TOLERANCES (UNLESS NOTED)
DECIMAL: X.X : ±0.015, X.XX : ±0.01, X.XXX : ±0.005
FRACTIONAL: ±1/32

NO. PARTS REQ'D: 403

RENSSELAER POLYTECHNIC INSTITUTE

Motor Drive Belt Carrier (Part #12)

DRAWN BY: SETH WRAIGHT
E-MAIL: WRAIGS@RPI.EDU **PHONE:** (607)342-1812
FACULTY ADVISOR: Samuel Chiaponne **CHECKED:** PEP
SIZE B | **COURSE NAME/NUMBER:** MP&S Ferris Wheel Team | SECTION D
DATE: Thursday, February 28, 2013 9:12:04 PM
SCALE 8:1 | CAD FILE: 12CandyA_MotorDriveBeltCarrier20 | SHEET 1 OF 1

REV.	DESCRIPTION	DATE	APPROVED
A	Initial Revision S13	3/20/2013	Eric A.
B	Added chamfer on post of motor strap, added not about process	5/7/2013	Eric A.

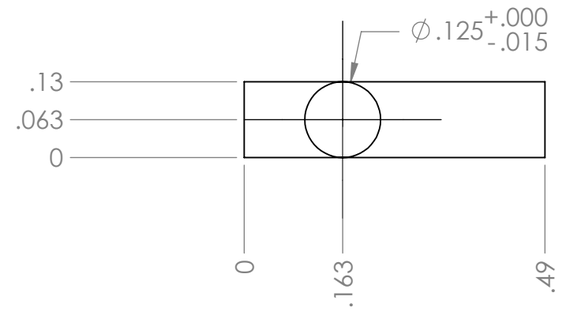

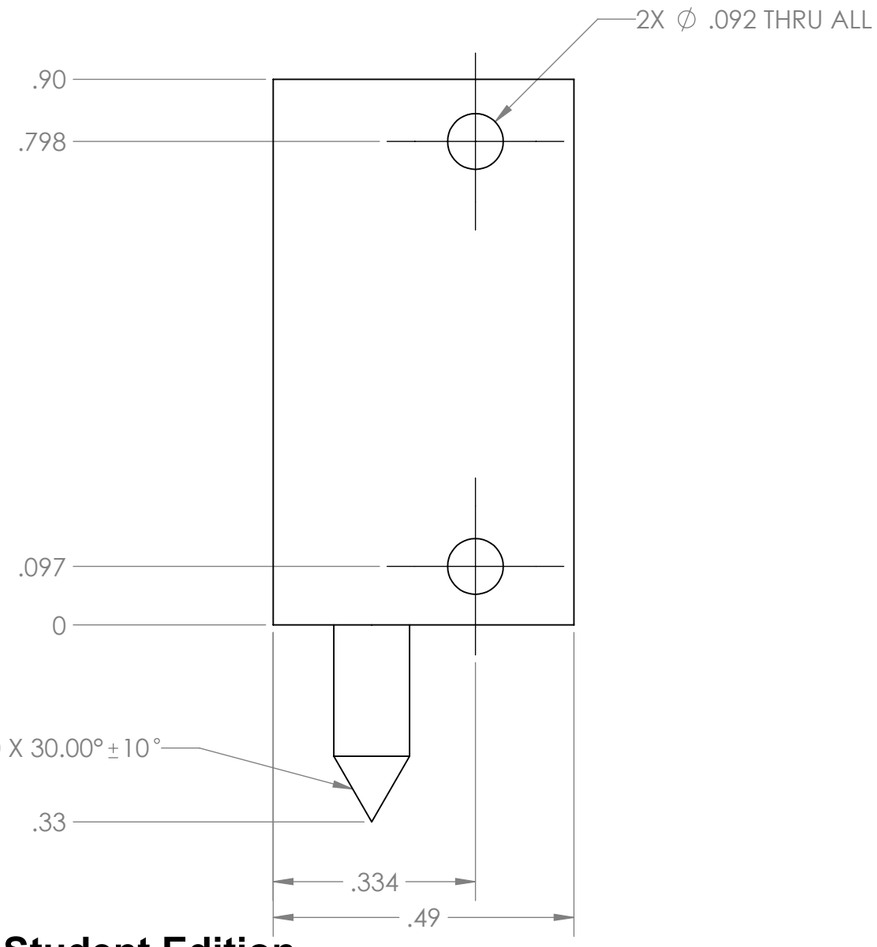

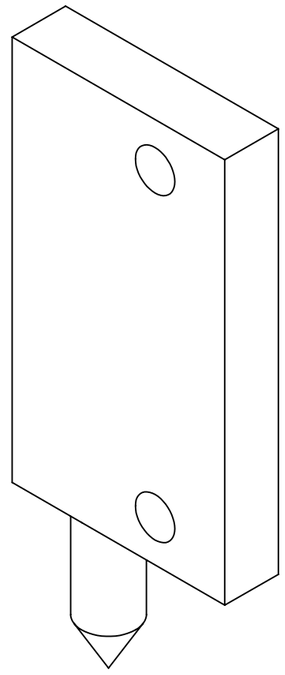

SolidWorks Student Edition.
For Academic Use Only.

DWG NOTES: (UNLESS OTHERWISE NOTED)
1) ALL UNITS: INCHES
2) BREAK ALL SHARP EDGES
3) REMOVE ALL FLASHING & RUNNERS
4) MANUALLY FILE CHAMFER AT END OF MOTOR STRAP TO FACILITATE EASIER ASSEMBLY

MATERIAL: ABS (BLACK)

TOLERANCES (UNLESS NOTED)
DECIMAL: X.X : ±0.015, X.XX : ±0.01, X.XXX : ±0.005
FRACTIONAL: ±1/32

NO. PARTS REQ'D: 403

RENSSELAER POLYTECHNIC INSTITUTE

Motor Strap (Part #: 19)

DRAWN BY: SETH WRAIGHT
E-MAIL: WRAIGS@RPI.EDU **PHONE:** (607)342-1812
FACULTY ADVISOR: Samuel Chiaponne **CHECKED:** PEP
SIZE B | **COURSE NAME/NUMBER:** MP&S Ferris Wheel Team | SECTION D
DATE: Thursday, February 28, 2013 9:06:51 PM
SCALE 4:1 | CAD FILE: 12CandyA_MotorStrap19_C_021108 | SHEET 1 OF 1

REV.	DESCRIPTION	DATE	APPROVED
A	Initial Revision	3/20/2013	Eric A.
B	Added soldering note	5/7/2013	Eric A.

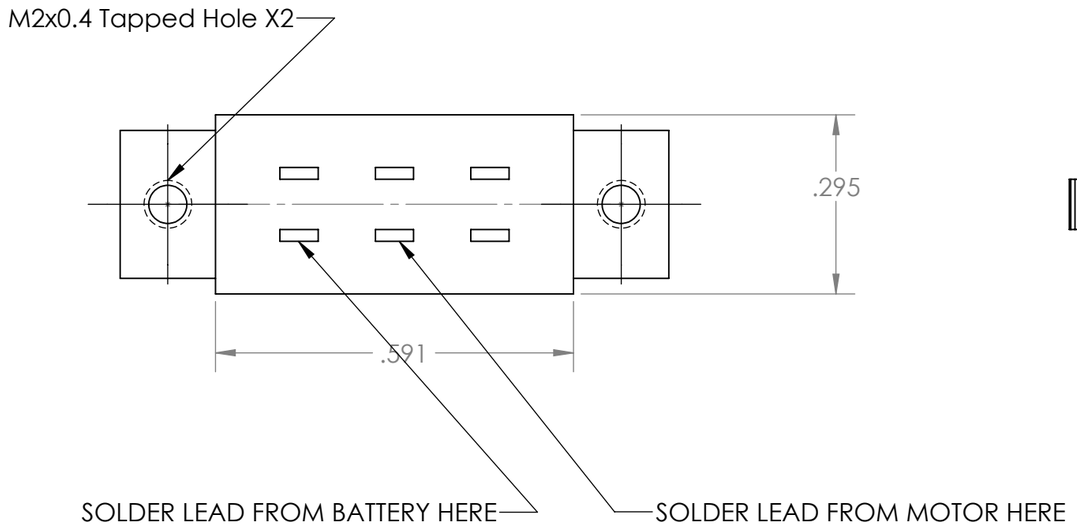

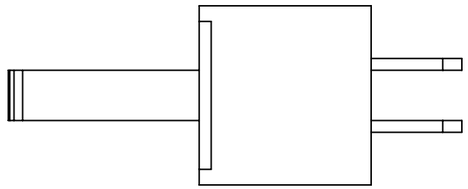

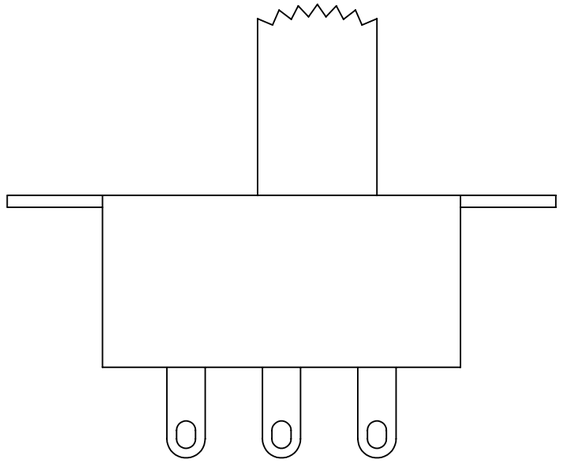

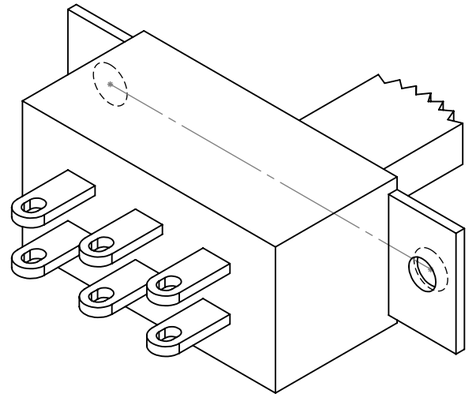

DWG NOTES: (UNLESS OTHERWISE NOTED)
1) ALL UNITS: INCHES
2) NON-CRITICAL DIMENSION NOT DIMENSIONED

MATERIAL: Purchased Component

TOLERANCES (UNLESS NOTED)

DECIMAL: X.X : ±0.015
X.XX : ±0.01
X.XXX : ±0.005

FRACTIONAL: ±1/32

NO. PARTS REQ'D: 403

RENSSELAER POLYTECHNIC INSTITUTE

On Switch (Part #: 18)

DRAWN BY: Patrick E. Pilvines

E-MAIL: pilvip@rpi.edu **PHONE:** (339) 364 - 1707

FACULTY ADVISOR: Samuel Chiaponne **CHECKED:** PEP

SIZE B | **COURSE NAME/NUMBER:** MP&S Ferris Wheel Team | SECTION D

DATE: Wednesday, March 20, 2013 9:26:20 PM

SCALE 4:1 | CAD FILE: 12CandyA_OnSwitch18_PC_011107 | SHEET 1 OF 1

REV.	DESCRIPTION	DATE	APPROVED
A	Initial Revision S13	3/20/2013	Eric A.
B	Opened tolerance on tooth angle	5/7/2013	Eric A.

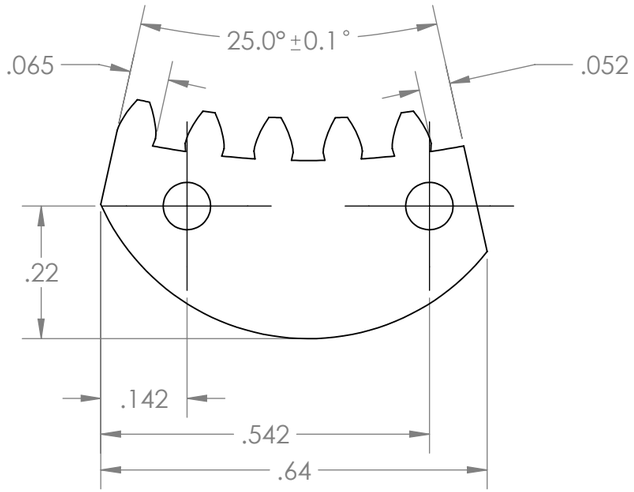

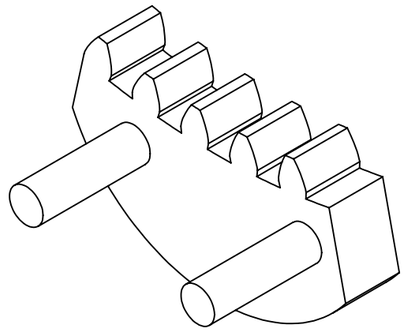

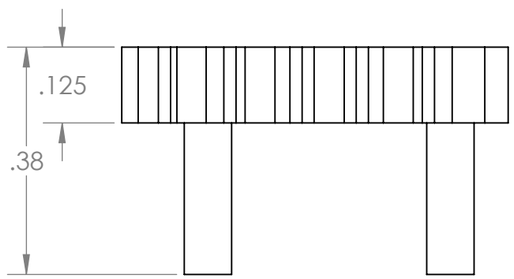

SolidWorks Student Edition.
For Academic Use Only.

DWG NOTES: (UNLESS OTHERWISE NOTED)
1) ALL UNITS: INCHES
2) BREAK ALL SHARP EDGES
3) REMOVE ALL FLASHING & RUNNERS

MATERIAL: ABS (BLACK)

TOLERANCES (UNLESS NOTED)
DECIMAL: X.X : ±0.015, X.XX : ±0.01, X.XXX : ±0.005
FRACTIONAL: ±1/32

NO. PARTS REQ'D: 403

RENSSELAER POLYTECHNIC INSTITUTE

Outer Gear
(Part #: 13)

DRAWN BY: SETH WRAIGHT
E-MAIL: WRAIGS@RPI.EDU **PHONE:** (607)342-1812
FACULTY ADVISOR: Samuel Chiaponne **CHECKED:** PEP
SIZE B | **COURSE NAME/NUMBER:** MP&S Ferris Wheel Team | SECTION D
DATE: Thursday, February 28, 2013 9:35:37 PM
SCALE 4:1 | CAD FILE: 12CandyA_OuterGear13_C_051108 | SHEET 1 OF 1

REV.	DESCRIPTION	DATE	APPROVED
A	Initial Revision S13	3/20/2013	Eric A.
B	Added note about paper removal & dust cleaning	5/7/2013	Eric A.

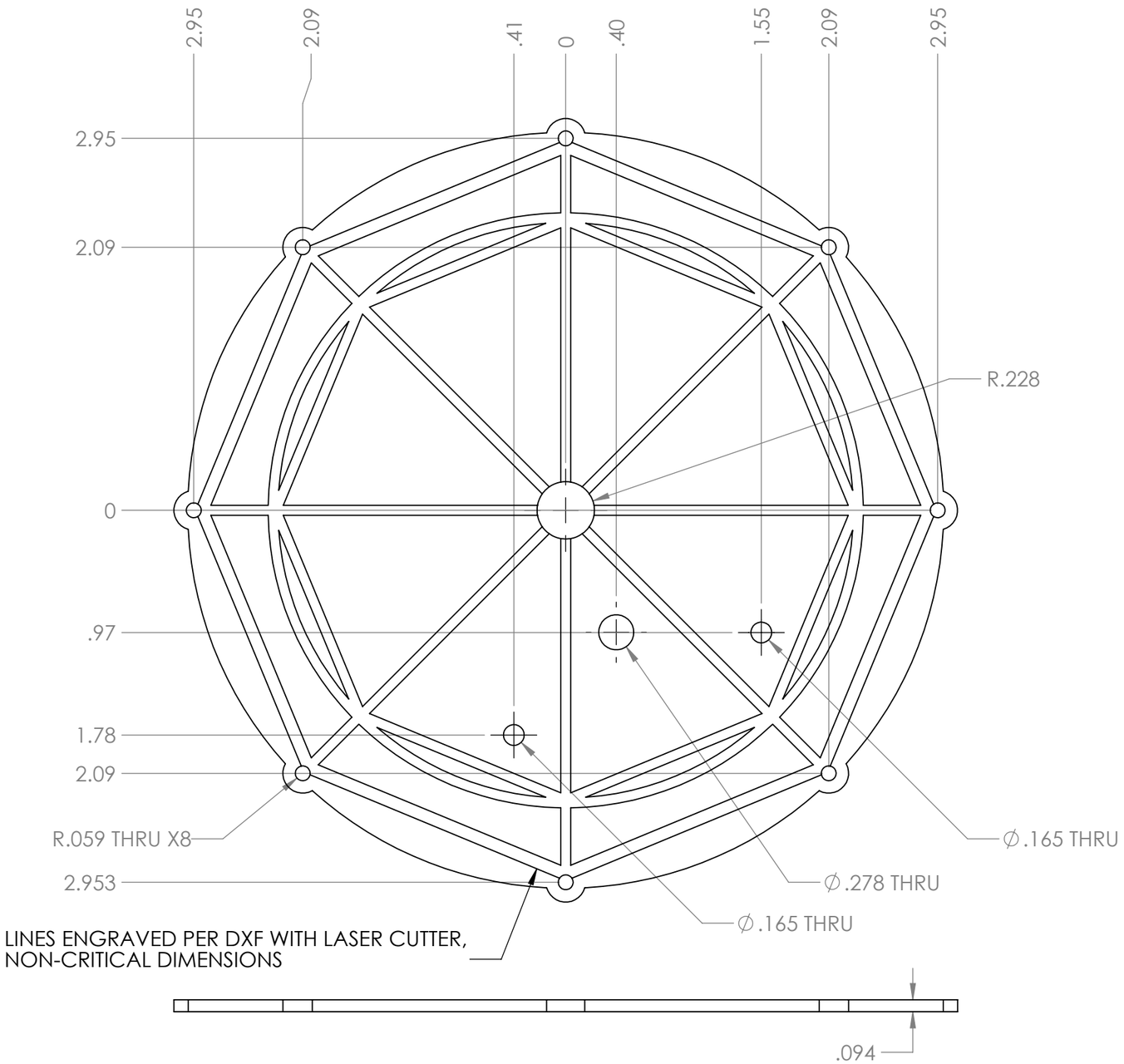

LINES ENGRAVED PER DXF WITH LASER CUTTER,
NON-CRITICAL DIMENSIONS

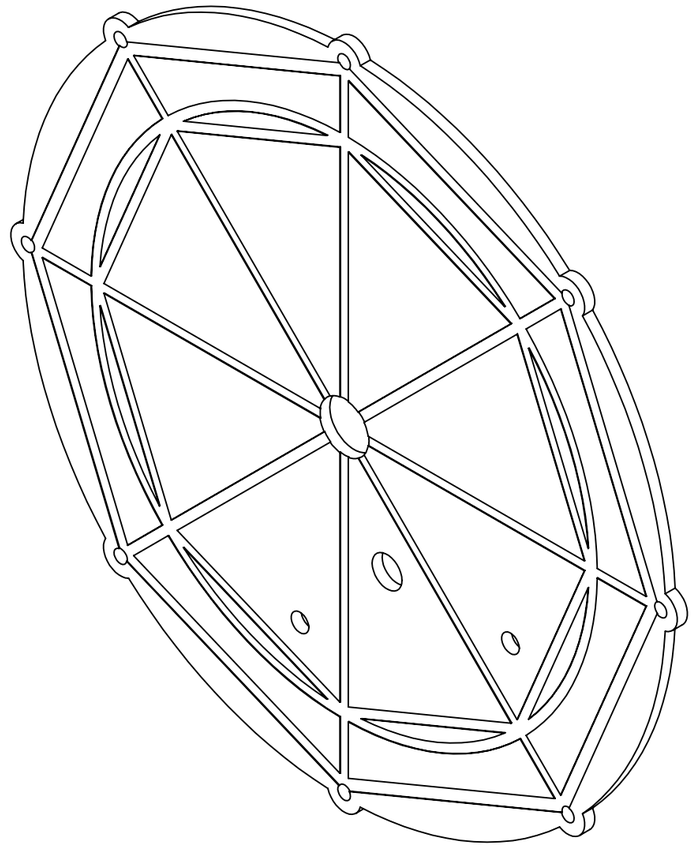

DWG NOTES: (UNLESS OTHERWISE NOTED)

1) ALL UNITS: INCHES
2) BREAK ALL SHARP EDGES
3) REMOVE PAPER FROM BACK OF STRUT AT ASSEMBLY TO PREVENT SCRATCHES ON PART
4) WASH PART BEFORE ASSEMBLY TO REMOVE DUST

MATERIAL: Acrylic

TOLERANCES (UNLESS NOTED)

DECIMAL: X.X : ±0.015, X.XX : ±0.01, X.XXX : ±0.005

FRACTIONAL: ±1/32

NO. PARTS REQ'D: 806

RENSSELAER POLYTECHNIC INSTITUTE

Struts
(Part #: 03)

DRAWN BY: Patrick E. Pilvines

E-MAIL: pilvip@rpi.edu **PHONE:** (339) 364 - 1707

FACULTY ADVISOR: Samuel Chiaponne **CHECKED:** PEP

SIZE B | **COURSE NAME/NUMBER:** MP&S Ferris Wheel Team | SECTION D

DATE: Wednesday, March 20, 2013 9:19:03 PM

SCALE 1:1 | CAD FILE: 12CandyA_Struts03_C_061017 | SHEET 1 OF 1

REV.	DESCRIPTION	DATE	APPROVED
A	Initial Revision S13	3/20/2013	Eric A.
B	Added note about bump removal	5/7/2013	Eric A.

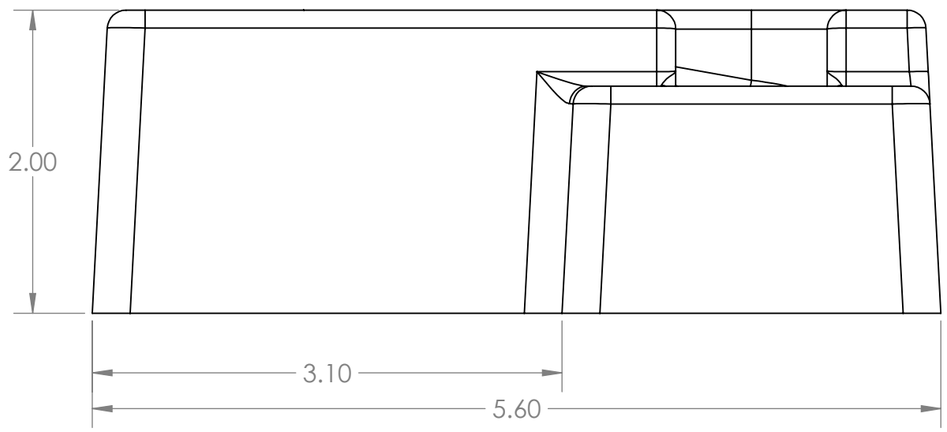

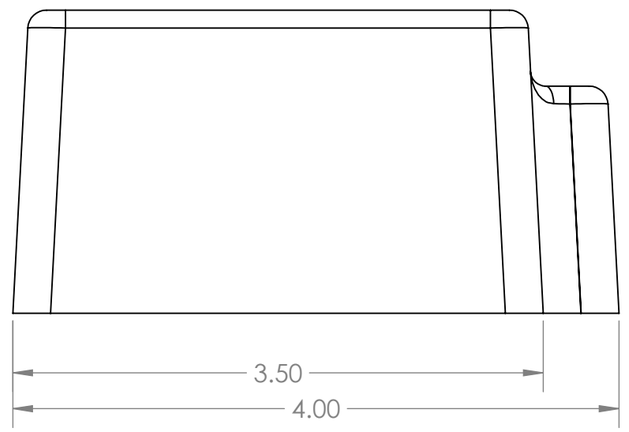

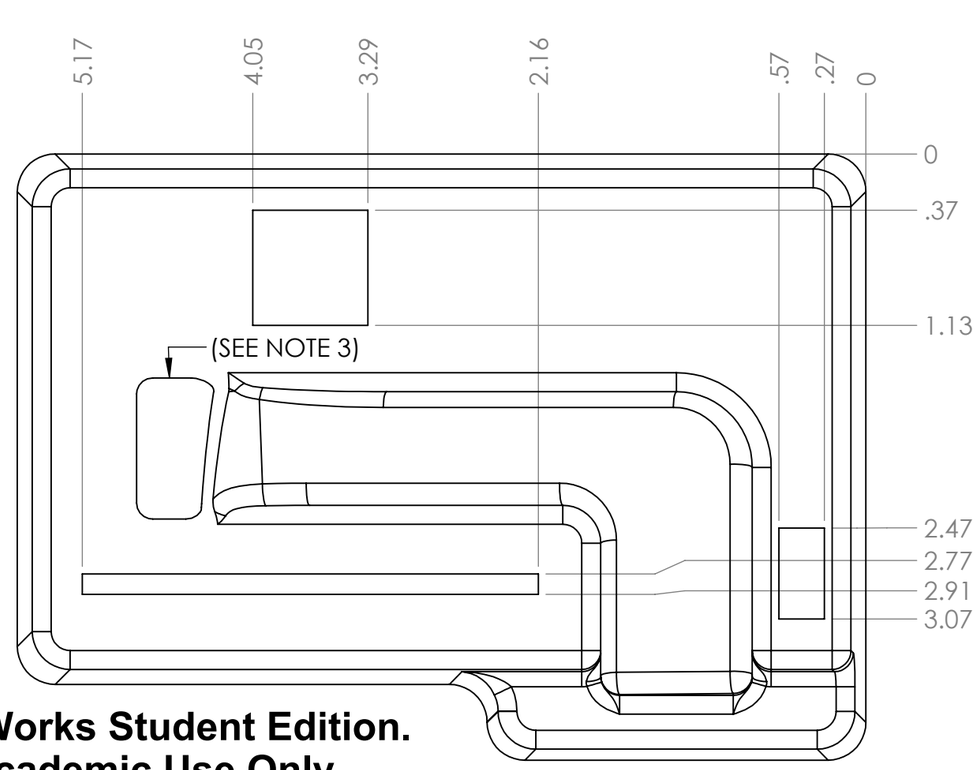

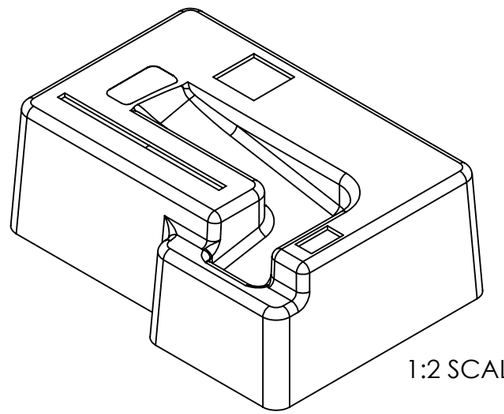

SolidWorks Student Edition.
For Academic Use Only.

DWG NOTES: (UNLESS OTHERWISE NOTED)
1) ALL UNITS: INCHES
2) BREAK ALL SHARP EDGES
3) REMOVE BUMP WITH BAND SAW & HEAT GUN DOWN FLAT TO ADD MILL LOGO PLATE, ENSURE PART IS FLAT, HOLE SIZE IS NON-CRITICAL

MATERIAL: POLYSTYRENE

TOLERANCES (UNLESS NOTED)
DECIMAL: X.X : ±0.015, X.XX : ±0.01, X.XXX : ±0.005
FRACTIONAL: ±1/32

NO. PARTS REQ'D: 403

RENSSELAER POLYTECHNIC INSTITUTE

Upper Base (Part #: 11)

DRAWN BY: SETH WRAIGHT
E-MAIL: WRAIGS@RPI.EDU **PHONE:** (607)342-1812
FACULTY ADVISOR: Samuel Chiaponne **CHECKED:** PEP
SIZE B | **COURSE NAME/NUMBER:** MP&S Ferris Wheel Team | SECTION D
DATE: Thursday, February 28, 2013 2:22:05 PM
SCALE 1:1 | CAD FILE: 12CandyA_UpperBase11_C_041112 | SHEET 1 OF 1

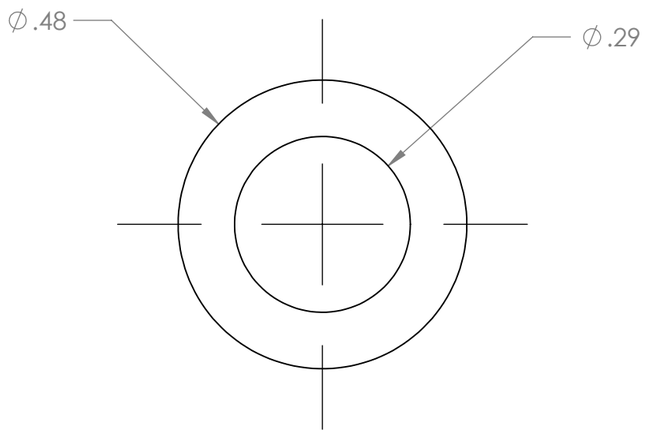

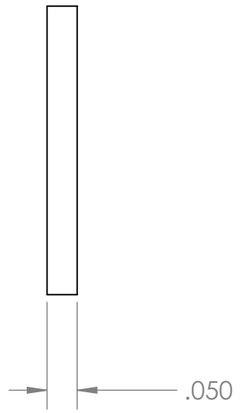

REV.	DESCRIPTION	DATE	APPROVED
A	Initial Issue of Drawing	5/7/2013	Eric A.

DWG NOTES: (UNLESS OTHERWISE NOTED)
1) ALL UNITS: INCHES
2) REMOVAL ALL FLASH & RUNNERS FROM PART

MATERIAL: BLACK ABS

TOLERANCES (UNLESS NOTED)
DECIMAL: X.X : ±0.015
X.XX : ±0.01
X.XXX : ±0.005
FRACTIONAL: ±1/32

NO. PARTS REQ'D: 400

RENSSELAER POLYTECHNIC INSTITUTE

Washer
(Part #: 22)

DRAWN BY: Patrick Pilvines
E-MAIL: pilvip@rpi.edu **PHONE:** (339) 364 - 1707
FACULTY ADVISOR: Samual Chiaponne **CHECKED:** PEP
SIZE B | **COURSE NAME/NUMBER:** MP&S Ferris Wheel Team | SECTION D
DATE: Tuesday, May 07, 2013 10:40:55 AM
SCALE 8:1 | CAD FILE: 12CandyA_Washer21_C_01412 | SHEET 1 OF 1

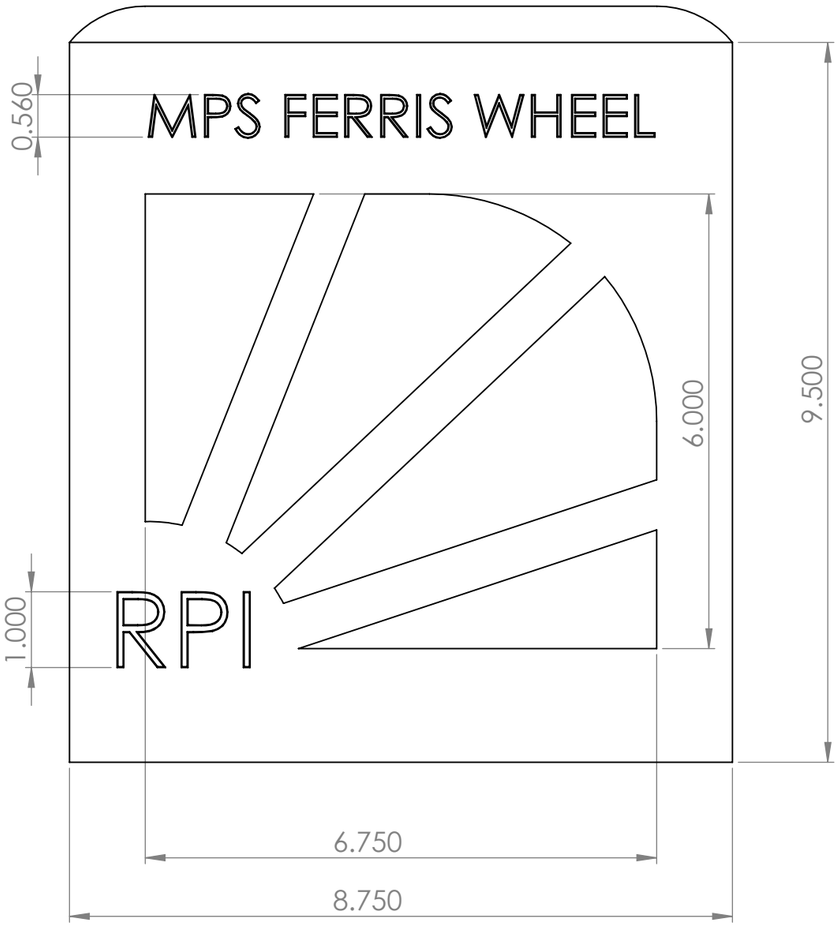

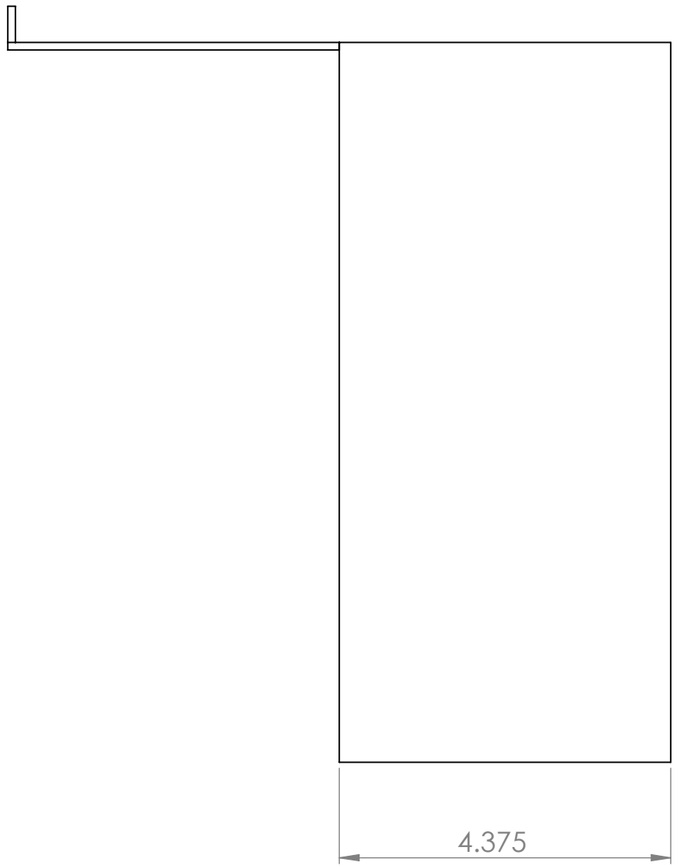

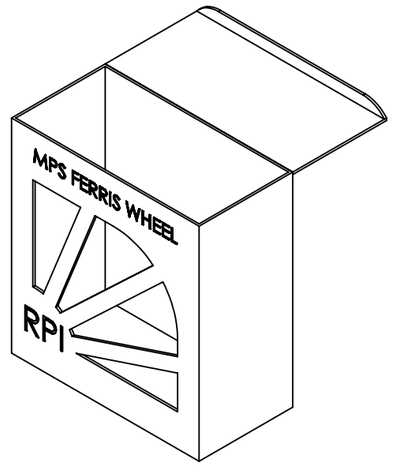

SolidWorks Student Edition.
For Academic Use Only.

DWG NOTES: (UNLESS OTHERWISE NOTED)
1) ALL UNITS: INCHES
2) < FILL IN NOTES HERE >

MATERIAL: Corrugated Cardboard

TOLERANCES (UNLESS NOTED)
DECIMAL: X.X : ±0.015
X.XX : ±0.01
X.XXX : ±0.005
FRACTIONAL: ±1/32
NO. PARTS REQ'D: < # >

RENSSELAER POLYTECHNIC INSTITUTE

Outer Box

DRAWN BY: Trevor Burtzos
E-MAIL: burtzt@rpi.edu **PHONE:** 503 816 8510
FACULTY ADVISOR: Samuel Chiaponne **CHECKED: (INITIALS)**
SIZE **B** **COURSE NAME/NUMBER:** MP&S Ferris Wheel Team SECTION D
DATE: Wednesday, May 08, 2013 9:16:00 AM
SCALE 1:2 CAD FILE: 12CandyA_OuterBox26_PC505205 SHEET 1 OF 1

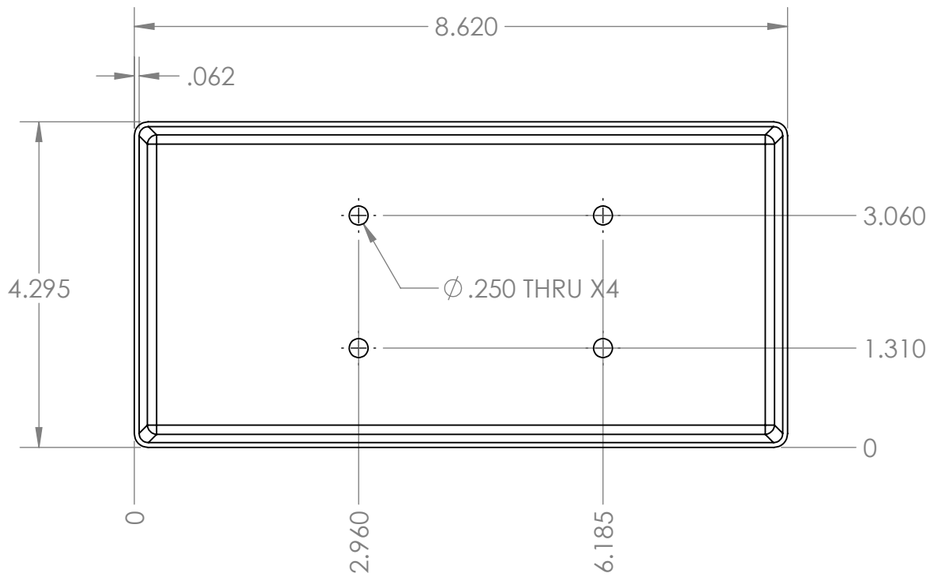

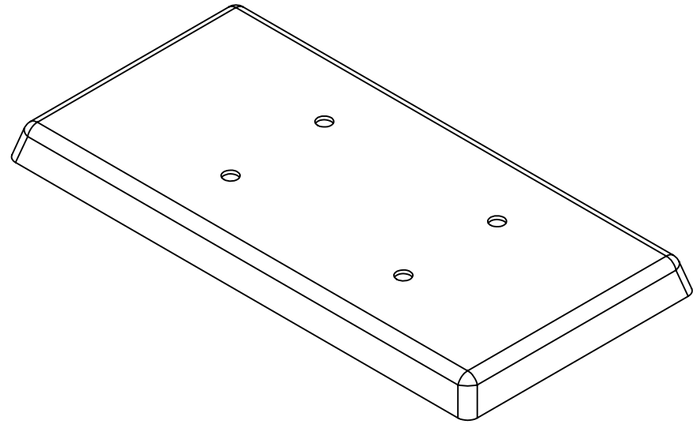

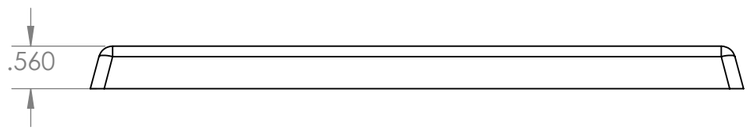

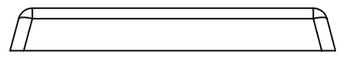

SolidWorks Student Edition.
For Academic Use Only.

DWG NOTES: (UNLESS OTHERWISE NOTED)
1) ALL UNITS: INCHES
2) < FILL IN NOTES HERE >

MATERIAL: Polystyrene

TOLERANCES (UNLESS NOTED)

DECIMAL: X.X : ±0.015
X.XX : ±0.01
X.XXX : ±0.005

FRACTIONAL: ±1/32

NO. PARTS REQ'D: < # >

RENSSELAER POLYTECHNIC INSTITUTE

Riser

DRAWN BY: Trevor Burtzos

E-MAIL: burtzt@rpi.edu **PHONE:** 503 816 8510

FACULTY ADVISOR: Samuel Chiaponne **CHECKED: (INITIALS)**

SIZE **B** | **COURSE NAME/NUMBER:** MP&S Delta Team | SECTION D

DATE: Monday, May 06, 2013 2:07:18 PM

SCALE 1:2 | CAD FILE: riser | SHEET 1 OF 1

ITEM NO.	PART NUMBER	DESCRIPTION	QTY.
1	12CandyA_BackSupportFixtureBase501_PF501_010224	Fixture Base	1
2	12CandyA_BackSupport06_C_071108	Back Support	4
3	12CandyA_BackSupportFixtureBackPlate502_PF502_010224	Back Plate	1
4	12CandyA_BackSupportFixtureTweenPlate504_PF504_010224	Tween Plate	3
5	12CandyA_BackSupportFixtureWedgeUpper506_PF506_010224	Upper Wedge	2
6	12CandyA_BackSupportFixtureWedgeLower505_PF505_010224	Lower Wedge	2
7	12CandyA_BackSupportFixtureHoldDown503_PF503_010224	Holddown	1

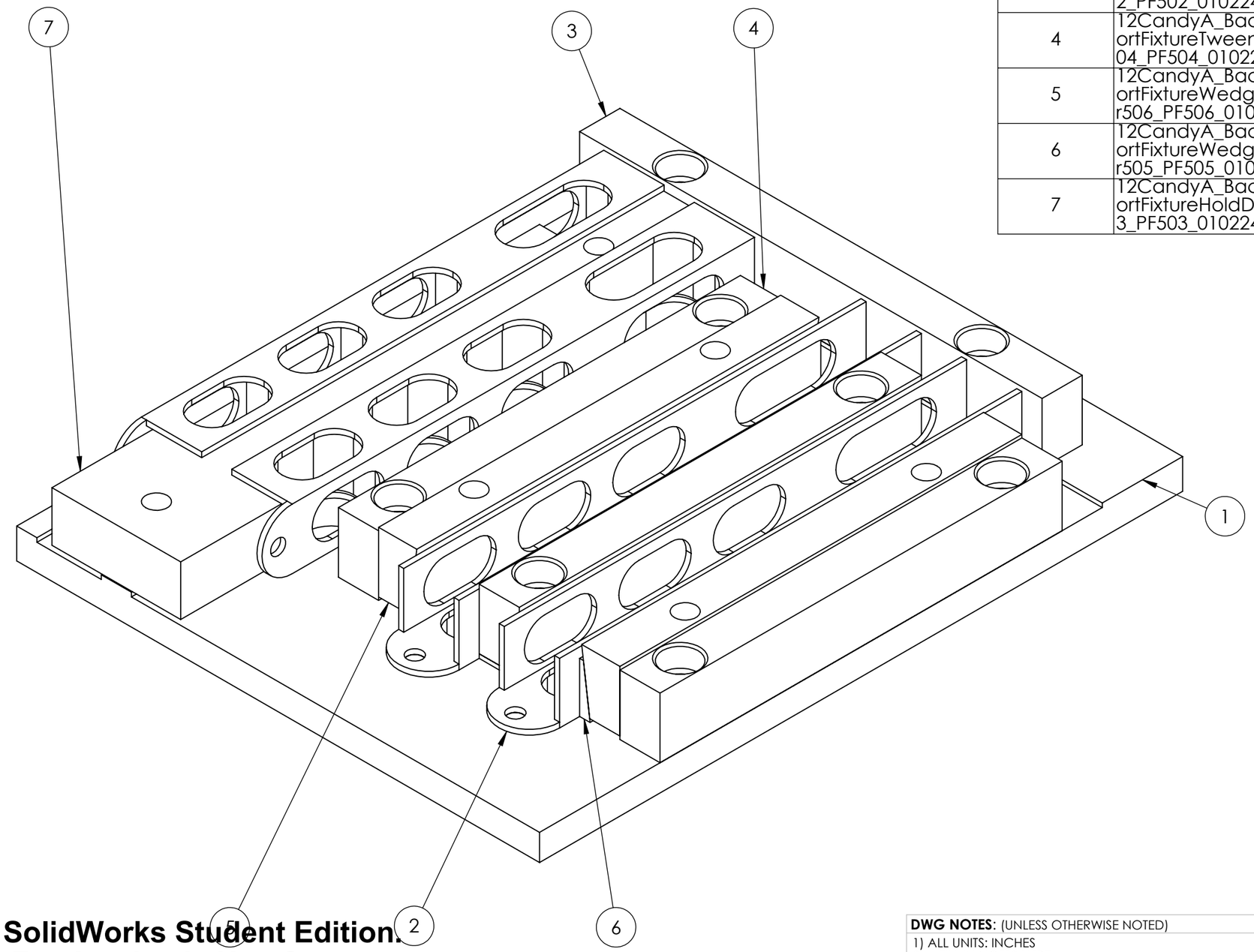

SolidWorks Student Edition.
For Academic Use Only.

DWG NOTES: (UNLESS OTHERWISE NOTED)
1) ALL UNITS: INCHES
2) < FILL IN NOTES HERE >

MATERIAL: ALUMINUM

TOLERANCES (UNLESS NOTED)

DECIMAL: X.X : ±0.015
X.XX : ±0.01
X.XXX : ±0.005

FRACTIONAL: ±1/32

NO. PARTS REQ'D: 1 OR 2

RENSSELAER POLYTECHNIC INSTITUTE

BACK SUPPORT CNC FIXTURE ASSEMBLY

DRAWN BY: SETH WRAIGHT

E-MAIL: wraigs@rpi.edu **PHONE:** (607)342-1812

FACULTY ADVISOR: Samuel Chiaponne **CHECKED: (INITIALS)**

SIZE **B** **COURSE NAME/NUMBER:** MP&S A Team SECTION D

DATE: Sunday, February 24, 2013 9:58:03 PM

SCALE 1:2 CAD FILE: 12CandyA_BackSupportFixtureBase501_PF501_010224 SHEET 1 OF 1

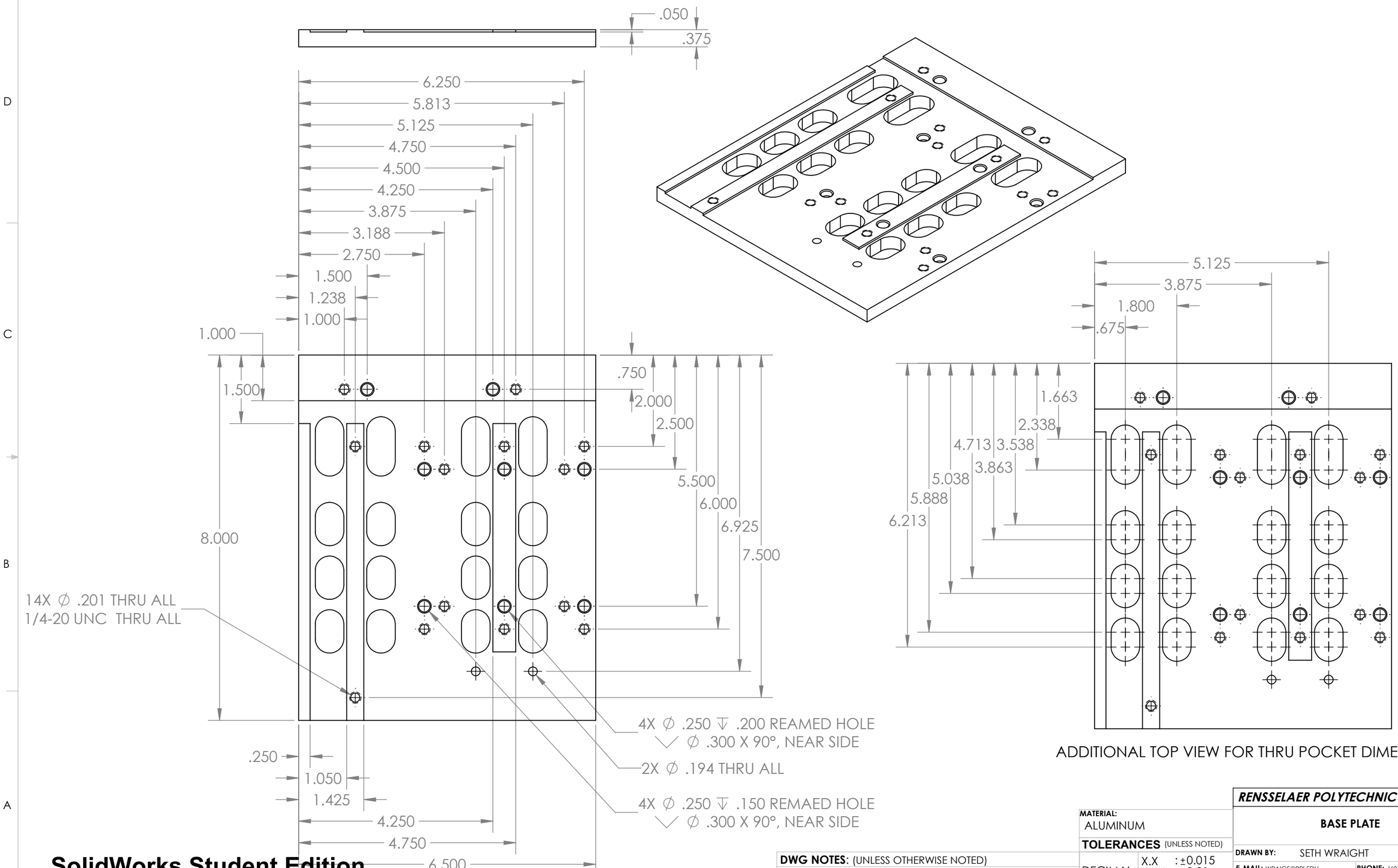

ADDITIONAL TOP VIEW FOR THRU POCKET DIMENSIONS

SolidWorks Student Edition.
For Academic Use Only.

DWG NOTES: (UNLESS OTHERWISE NOTED)
1) ALL UNITS: INCHES
2) < FILL IN NOTES HERE >

MATERIAL: ALUMINUM

TOLERANCES (UNLESS NOTED)

DECIMAL: X.X : ±0.015, X.XX : ±0.01, X.XXX : ±0.005

FRACTIONAL: ±1/32

NO. PARTS REQ'D: 1

RENSSELAER POLYTECHNIC INSTITUTE

BASE PLATE

DRAWN BY: SETH WRAIGHT

E-MAIL: WRAIGS@RPI.EDU **PHONE:** (607)342-1812

FACULTY ADVISOR: Samuel Chiaponne **CHECKED: (INITIALS)**

SIZE **B** **COURSE NAME/NUMBER:** MP&S A Team SECTION D

DATE: Sunday, February 24, 2013 9:58:03 PM

SCALE 1:2 CAD FILE: 12CandyA_BackSupportFixture500_P1500_010224 SHEET 2 OF 7

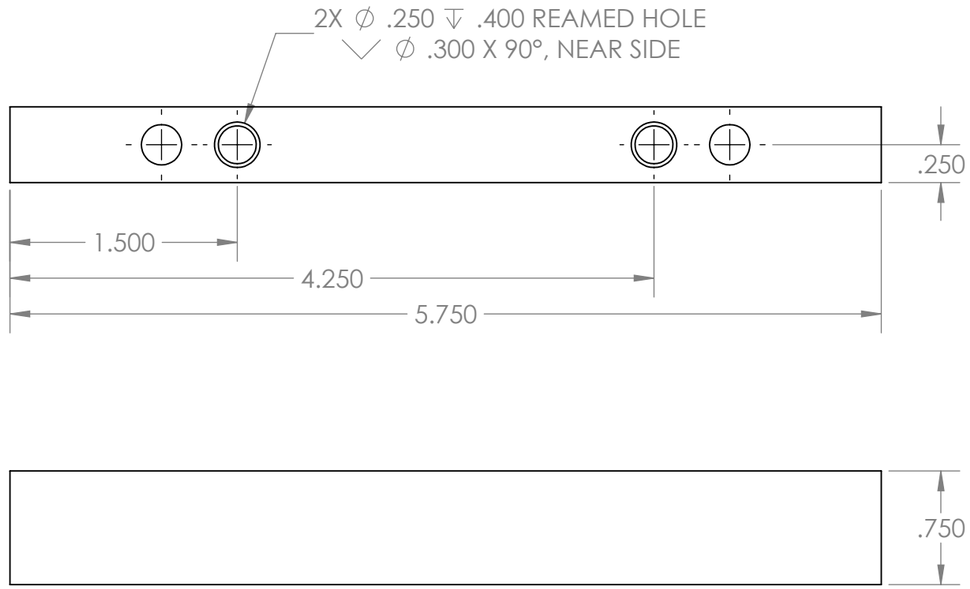

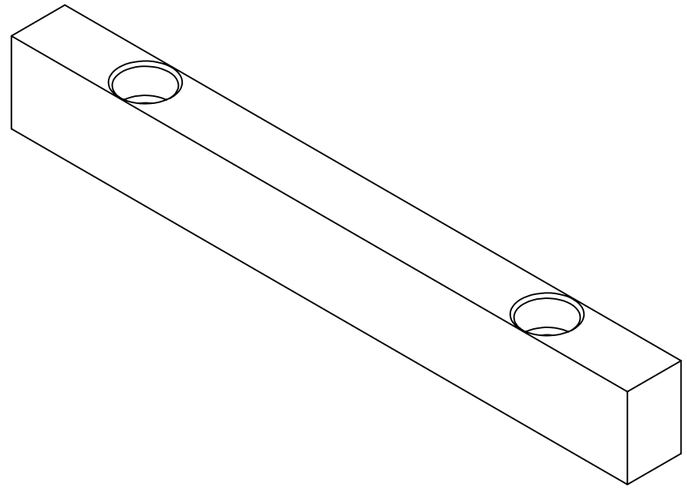

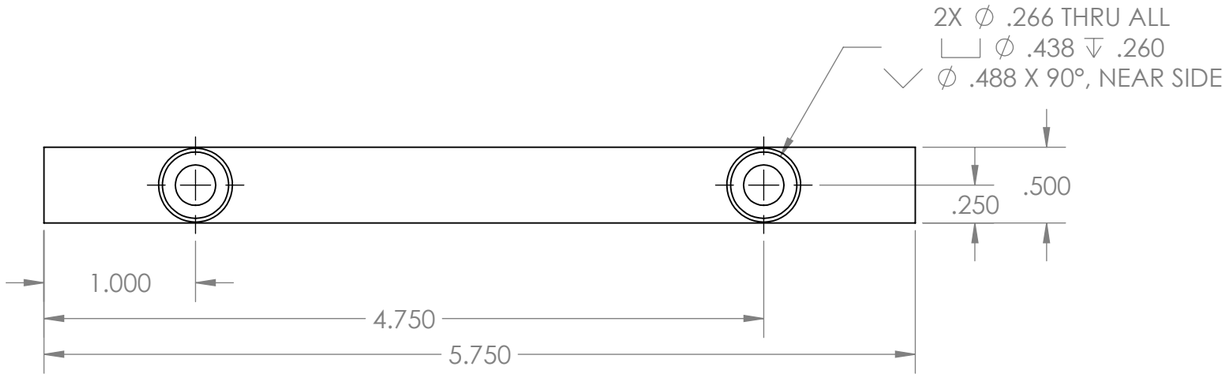

SolidWorks Student Edition.
For Academic Use Only.

DWG NOTES: (UNLESS OTHERWISE NOTED)
1) ALL UNITS: INCHES
2) < FILL IN NOTES HERE >

MATERIAL: ALUMINUM

TOLERANCES (UNLESS NOTED)

DECIMAL: X.X : ±0.015, X.XX : ±0.01, X.XXX : ±0.005

FRACTIONAL: ±1/32

NO. PARTS REQ'D: 1

RENSSELAER POLYTECHNIC INSTITUTE

BACK PLATE

DRAWN BY: SETH WRAIGHT

E-MAIL: WRAIGS@RPI.EDU **PHONE:** (607)342-1812

FACULTY ADVISOR: Samuel Chiaponne **CHECKED: (INITIALS)**

SIZE **B** **COURSE NAME/NUMBER:** MP&S A Team SECTION D

DATE: Sunday, February 24, 2013 9:58:03 PM

SCALE 1:1 CAD FILE: 12CandyA_BackSupportFixture500_PT500_010224 SHEET 3 OF 7

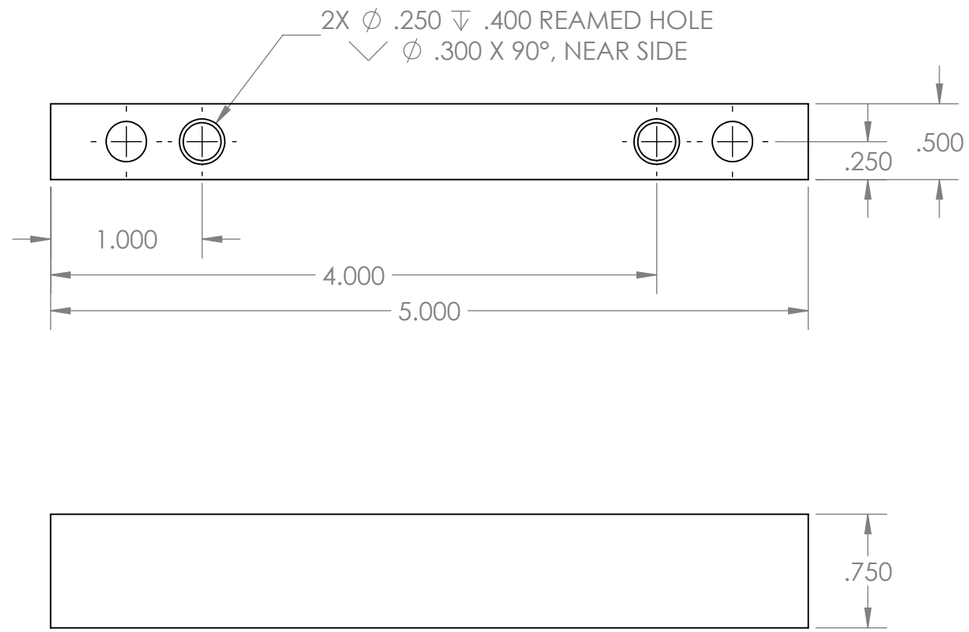

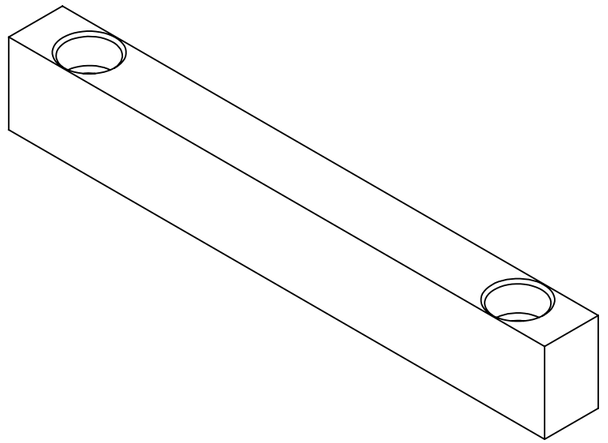

SolidWorks Student Edition.
For Academic Use Only.

DWG NOTES: (UNLESS OTHERWISE NOTED)
1) ALL UNITS: INCHES
2) < FILL IN NOTES HERE >

MATERIAL: ALUMINUM

TOLERANCES (UNLESS NOTED)

DECIMAL: X.X : ±0.015
X.XX : ±0.01
X.XXX : ±0.005

FRACTIONAL: ±1/32

NO. PARTS REQ'D: 3

RENSSELAER POLYTECHNIC INSTITUTE

TWEEN PLATE

DRAWN BY: SETH WRAIGHT

E-MAIL: WRAIGS@RPI.EDU **PHONE:** (607)342-1812

FACULTY ADVISOR: Samuel Chiaponne **CHECKED: (INITIALS)**

SIZE **B** **COURSE NAME/NUMBER:** MP&S A Team SECTION D

DATE: Sunday, February 24, 2013 9:58:03 PM

SCALE 1:1 CAD FILE: 12CandyA_BackSupportFixture500_PT500_010224 SHEET 4 OF 7

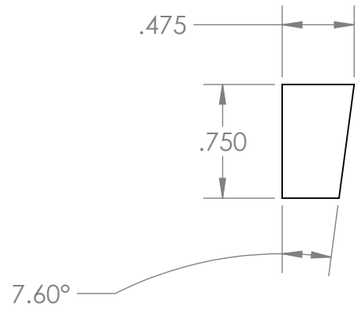

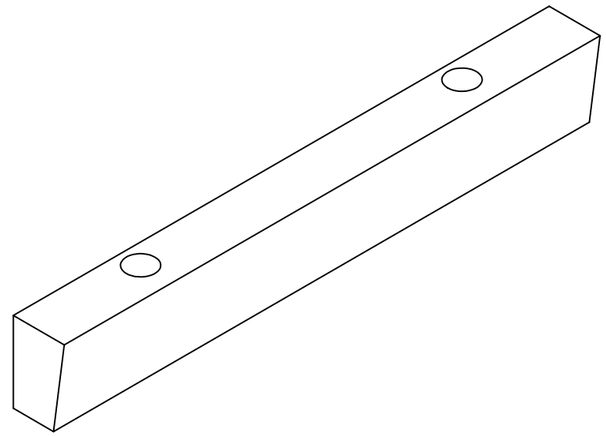

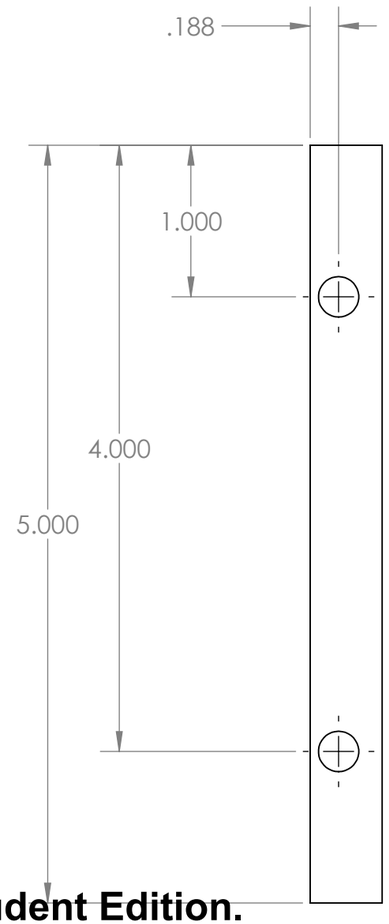

SolidWorks Student Edition.
For Academic Use Only.

DWG NOTES: (UNLESS OTHERWISE NOTED)
1) ALL UNITS: INCHES
2) < FILL IN NOTES HERE >

MATERIAL: ALUMINUM

TOLERANCES (UNLESS NOTED)
DECIMAL: X.X : ±0.015
X.XX : ±0.01
X.XXX : ±0.005
FRACTIONAL: ±1/32
NO. PARTS REQ'D: 2

RENSSELAER POLYTECHNIC INSTITUTE

UPPER WEDGE

DRAWN BY: SETH WRAIGHT
E-MAIL: WRAIGS@RPI.EDU **PHONE:** (607)342-1812
FACULTY ADVISOR: Samuel Chiaponne **CHECKED: (INITIALS)**
SIZE **B** **COURSE NAME/NUMBER:** MP&S A Team SECTION D
DATE: Sunday, February 24, 2013 9:58:03 PM
SCALE 1:1 CAD FILE: 12CandyA_BackSupportFrame005_P0007010224 SHEET 5 OF 6

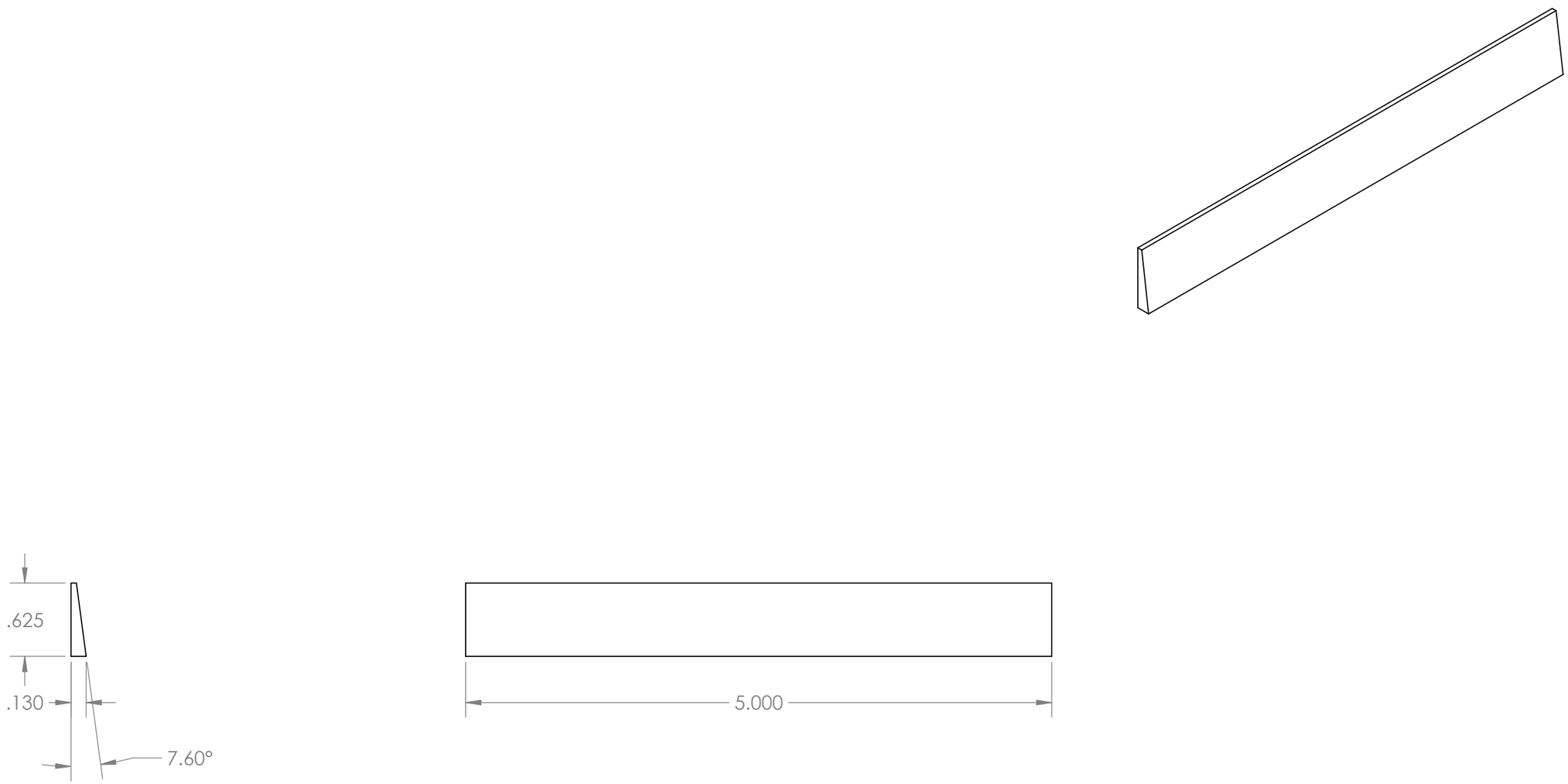

SolidWorks Student Edition.
For Academic Use Only.

DWG NOTES: (UNLESS OTHERWISE NOTED)
1) ALL UNITS: INCHES
2) < FILL IN NOTES HERE >

MATERIAL: ALUMINUM

TOLERANCES (UNLESS NOTED)

DECIMAL: X.X : ±0.015
X.XX : ±0.01
X.XXX : ±0.005

FRACTIONAL: ±1/32

NO. PARTS REQ'D: 2

RENSSELAER POLYTECHNIC INSTITUTE

LOWER WEDGE

DRAWN BY: SETH WRAIGHT

E-MAIL: WRAIGS@RPI.EDU **PHONE:** (607)342-1812

FACULTY ADVISOR: Samuel Chiaponne **CHECKED: (INITIALS)**

SIZE **B** **COURSE NAME/NUMBER:** MP&S A Team SECTION D

DATE: Sunday, February 24, 2013 9:58:03 PM

SCALE 1:1 CAD FILE: 12CandyA_BackSupportFixture500_PF500_010224 SHEET 6 OF 7

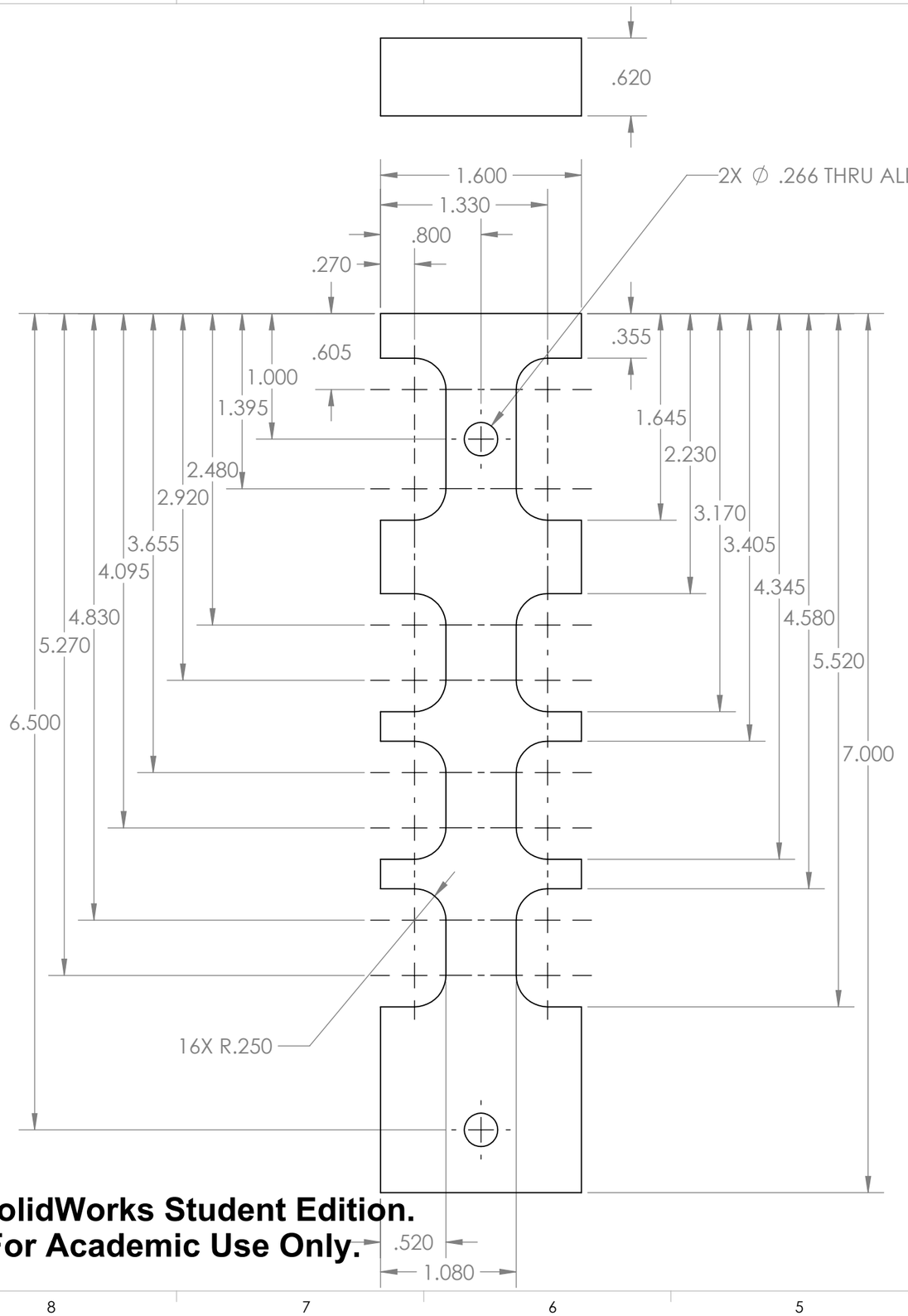

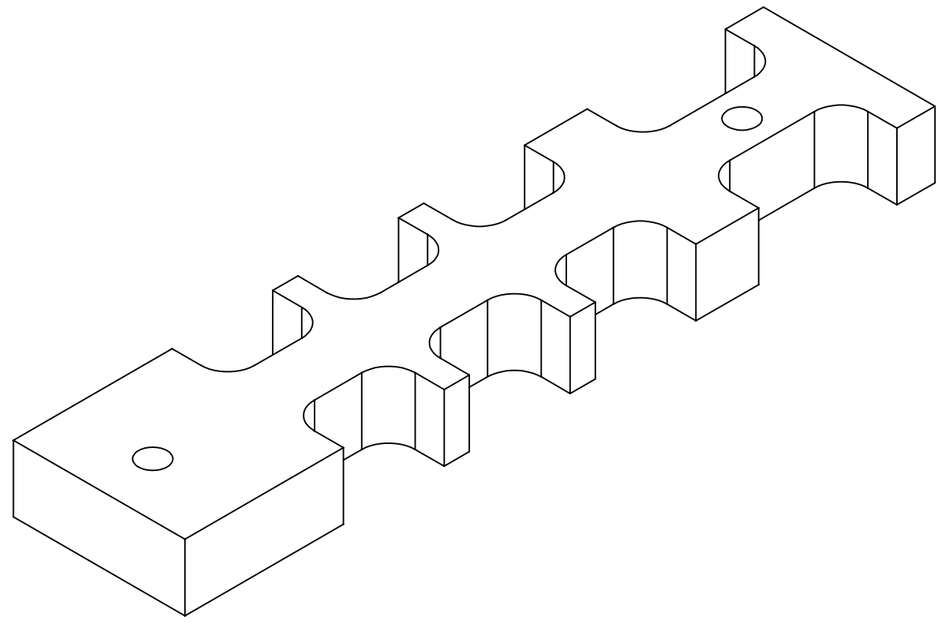

SolidWorks Student Edition.
For Academic Use Only.

DWG NOTES: (UNLESS OTHERWISE NOTED)
1) ALL UNITS: INCHES
2) < FILL IN NOTES HERE >

MATERIAL: ALUMINUM

TOLERANCES (UNLESS NOTED)
DECIMAL: X.X : ±0.015, X.XX : ±0.01, X.XXX : ±0.005
FRACTIONAL: ±1/32
NO. PARTS REQ'D: 1

RENSSELAER POLYTECHNIC INSTITUTE

HOLDDOWN

DRAWN BY: SETH WRAIGHT
E-MAIL: WRAIGS@RPI.EDU **PHONE:** (607)342-1812
FACULTY ADVISOR: Samuel Chiaponne **CHECKED: (INITIALS)**
SIZE B | **COURSE NAME/NUMBER:** MP&S A Team | SECTION D
DATE: Sunday, February 24, 2013 9:58:03 PM
SCALE 1:1 | CAD FILE: 12CandyA_BackSupportFixture600_PR00_010224 | SHEET 7 OF 7

ITEM NO.	PART NUMBER	QTY.
1	12CandyA_DriveBeltFixtureAxleCap302_PF302_011206	1
2	12CandyA_DriveBeltCarrier16_C_061108	10
3	12CandyA_DriveBeltFixtureAxle301_PF301_011206	1
4	12CandyA_DriveBeltFixtureThru303_PF303_011206	1

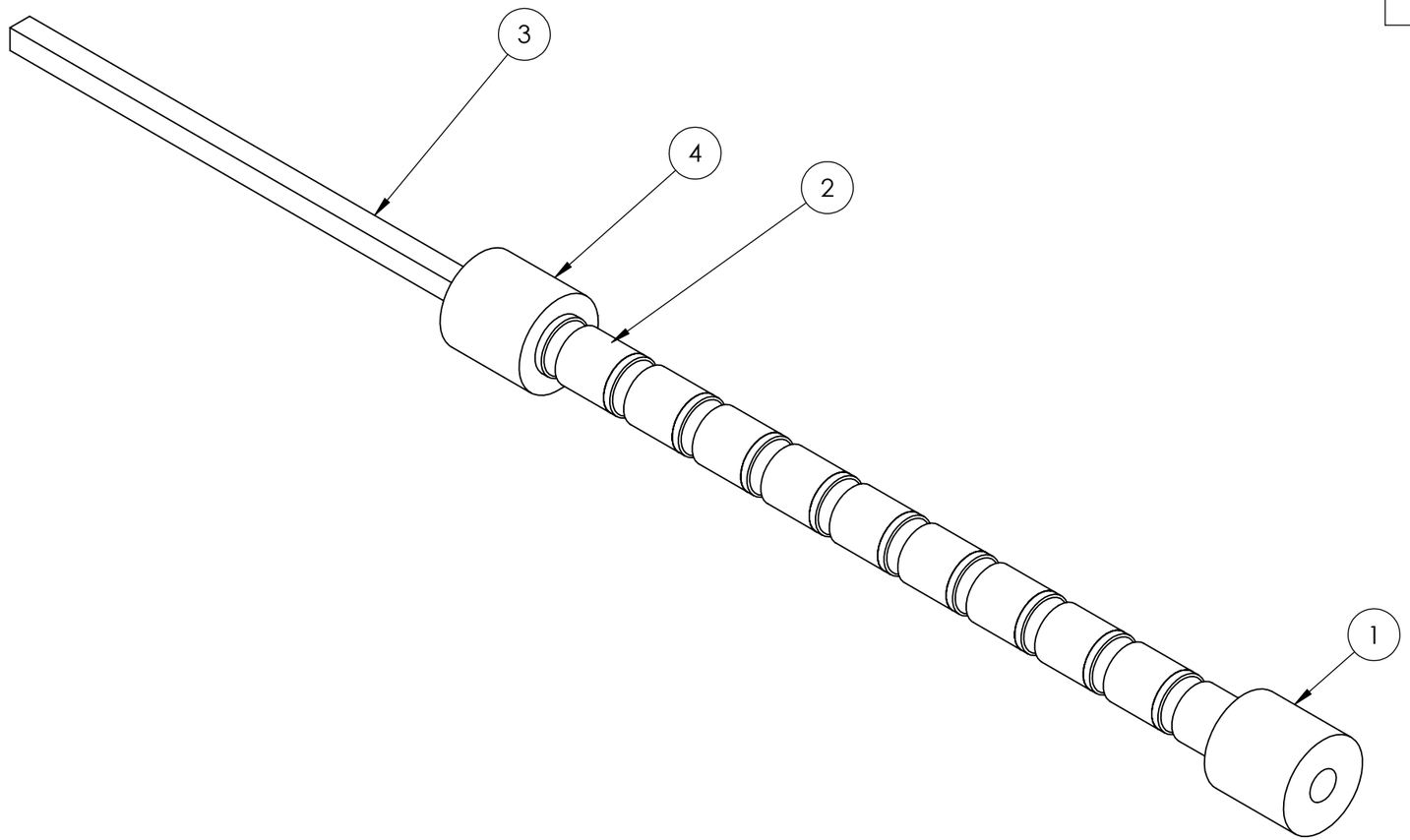

SolidWorks Student Edition.
For Academic Use Only.

DWG NOTES: (UNLESS OTHERWISE NOTED)
1) ALL UNITS: INCHES
2) < FILL IN NOTES HERE >

MATERIAL: STEEL

TOLERANCES (UNLESS NOTED)

DECIMAL: X.X : ±0.015
X.XX : ±0.01
X.XXX : ±0.005

FRACTIONAL: ±1/32

NO. PARTS REQ'D: 1

RENSSELAER POLYTECHNIC INSTITUTE

DRIVE BELT CARRIER FIXTURE

DRAWN BY: SETH WRAIGHT

E-MAIL: WRAIGS@RPI.EDU **PHONE:** (607)342-1812

FACULTY ADVISOR: Samuel Chiaponne **CHECKED: (INITIALS)**

SIZE **B** | **COURSE NAME/NUMBER:** MP&S Ferris Wheel Team | SECTION D

DATE: Monday, February 25, 2013 9:06:12 PM

SCALE 1:1 | CAD FILE: 12CandyA_DriveBeltFixture300_PF300_011206 | SHEET 1 OF 4

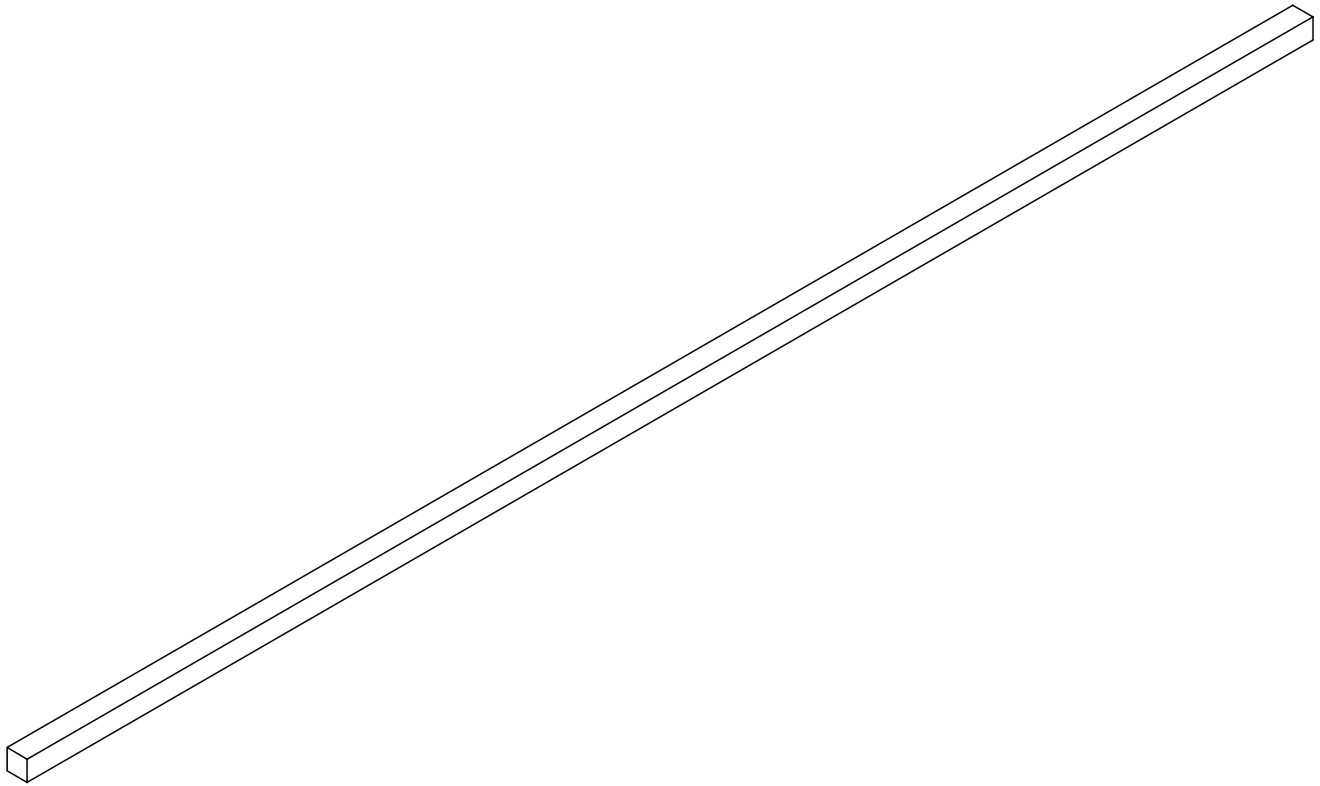

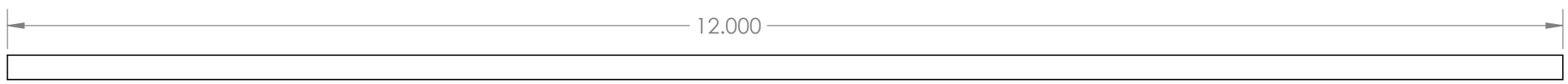

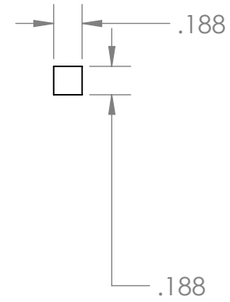

SolidWorks Student Edition.
For Academic Use Only.

DWG NOTES: (UNLESS OTHERWISE NOTED)
1) ALL UNITS: INCHES
2) < FILL IN NOTES HERE >

MATERIAL: STEEL

TOLERANCES (UNLESS NOTED)

DECIMAL: X.X : ±0.015
X.XX : ±0.01
X.XXX : ±0.005

FRACTIONAL: ±1/32

NO. PARTS REQ'D: 1

RENSSELAER POLYTECHNIC INSTITUTE

DRIVE BELT CARRIER FIXTURE BODY

DRAWN BY: SETH WRAIGHT

E-MAIL: WRAIGS@RPI.EDU **PHONE:** (607)342-1812

FACULTY ADVISOR: Samuel Chiaponne **CHECKED: (INITIALS)**

SIZE **B** | **COURSE NAME/NUMBER:** MP&S Ferris Wheel Team | SECTION D

DATE: Monday, February 25, 2013 9:06:12 PM

SCALE 1:1 | CAD FILE: 12CandyA_DriveBeltFixture300_FF300_011206 | SHEET 2 OF 4

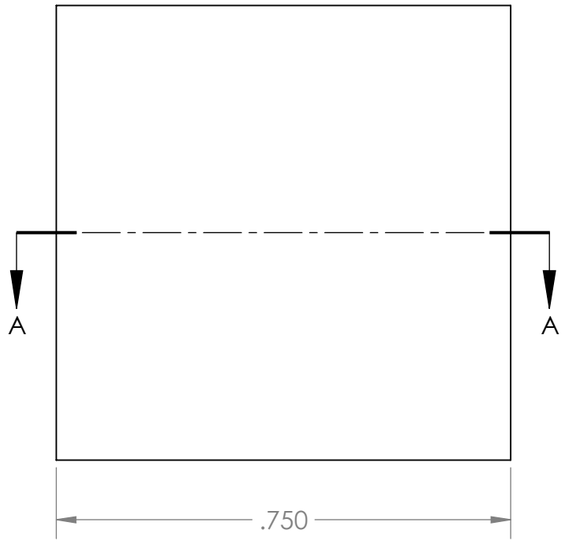

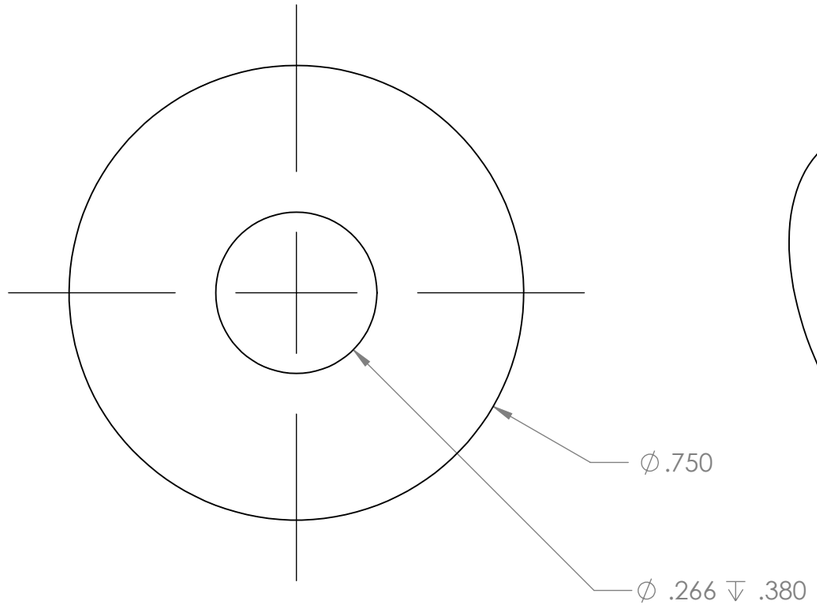

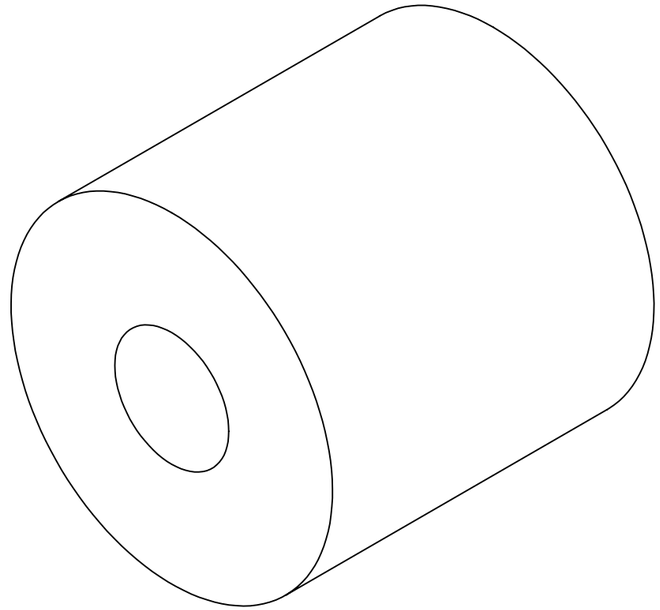

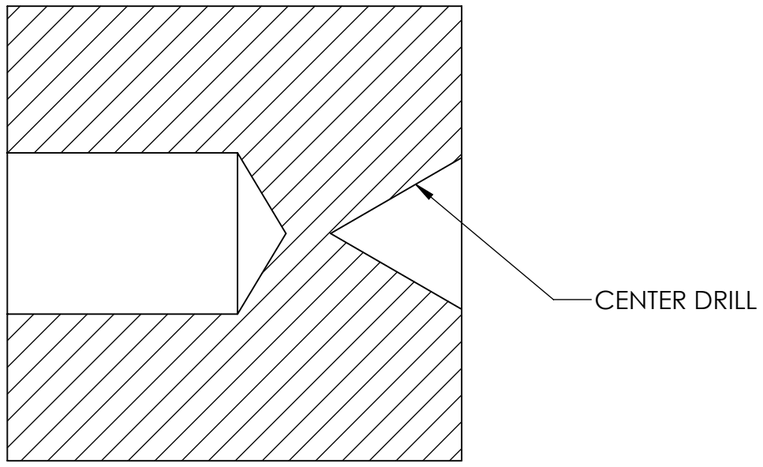

SECTION A-A

SolidWorks Student Edition.
For Academic Use Only.

DWG NOTES: (UNLESS OTHERWISE NOTED)
1) ALL UNITS: INCHES
2) < FILL IN NOTES HERE >

MATERIAL: STEEL

TOLERANCES (UNLESS NOTED)
DECIMAL: X.X : ±0.015
X.XX : ±0.01
X.XXX : ±0.005
FRACTIONAL: ±1/32

NO. PARTS REQ'D: 1

RENSSELAER POLYTECHNIC INSTITUTE

DRIVE BELT CARRIER FIXTURE CAP

DRAWN BY: SETH WRAIGHT
E-MAIL: WRAIGS@RPI.EDU **PHONE:** (607)342-1812
FACULTY ADVISOR: Samuel Chiaponne **CHECKED: (INITIALS)**
SIZE **B** **COURSE NAME/NUMBER:** MP&S Ferris Wheel Team SECTION D
DATE: Monday, February 25, 2013 9:06:12 PM
SCALE 4:1 CAD FILE: 12CandyA_DriveBeltFixture300_PF300_011206 SHEET 3 OF 4

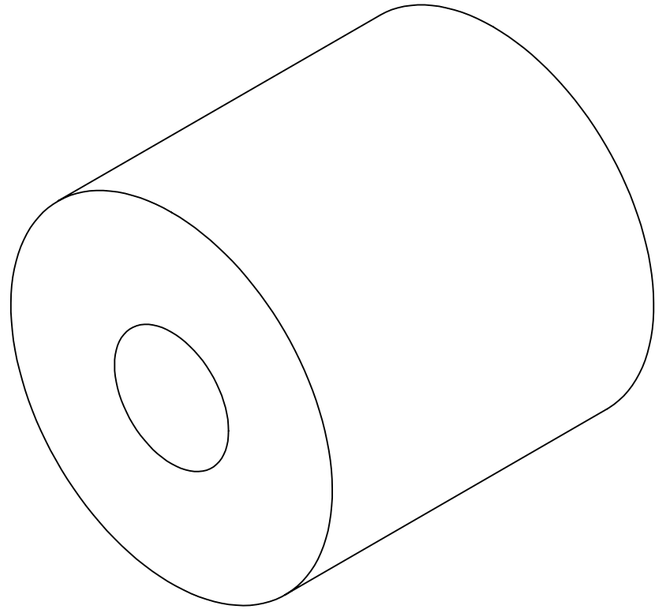

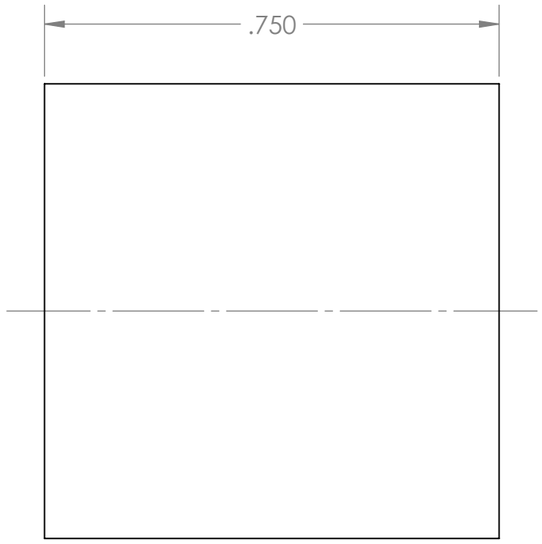

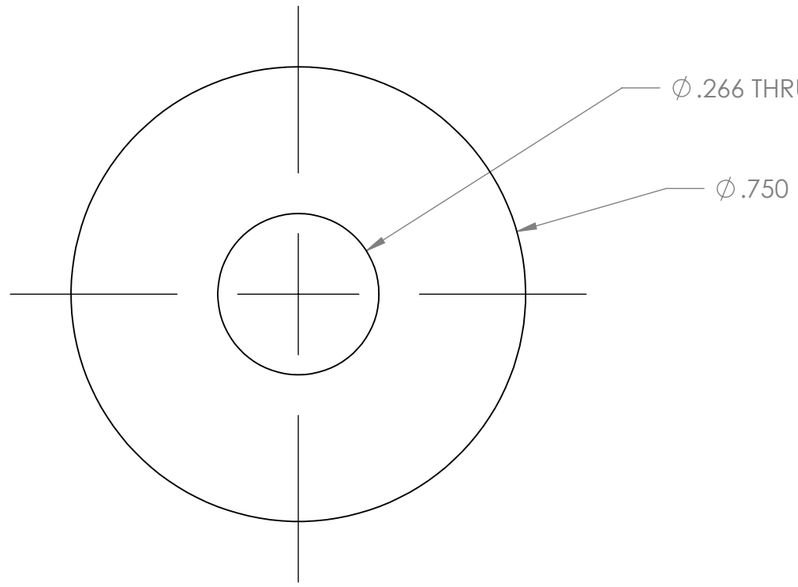

SolidWorks Student Edition.
For Academic Use Only.

DWG NOTES: (UNLESS OTHERWISE NOTED)
1) ALL UNITS: INCHES
2) MAX RADII (UNLESS NOTED) 0.03125"
3) BREAK ALL SHARP EDGES

MATERIAL: < INSERT MATERIAL HERE >

TOLERANCES (UNLESS NOTED)

DECIMAL: X.X : ±0.015
X.XX : ±0.01
X.XXX : ±0.005

FRACTIONAL: ±1/32

NO. PARTS REQ'D: 400

RENSSELAER POLYTECHNIC INSTITUTE

DRIVE BELT CARRIER FIXTURE
THRU BODY

DRAWN BY: Patrick Pilvines
E-MAIL: pilvip@rpi.edu **PHONE:** (339) 364 - 1707
FACULTY ADVISOR: Samuel Chiaponne **CHECKED: (INITIALS)**
SIZE **B** **COURSE NAME/NUMBER:** MP&S Ferris Wheel Team SECTION D
DATE: Monday, February 25, 2013 9:06:12 PM
SCALE 4:1 CAD FILE: 12CandyA_DriveBeltFixture300_PF300_011206 SHEET 4 OF 4

ITEM NO.	PART NUMBER	QTY.
1	12CandyA_MotorDriveBeltFixtureBody601_PF601_010225	1
2	12CandyA_MotorDriveBeltFixtureCap602_PF602_010225	1
3	12CandyA_MotorDriveBeltCarrier20_C_051129	20
4	12CandyA_MotorDriveBeltThru603_PF603_011206	1

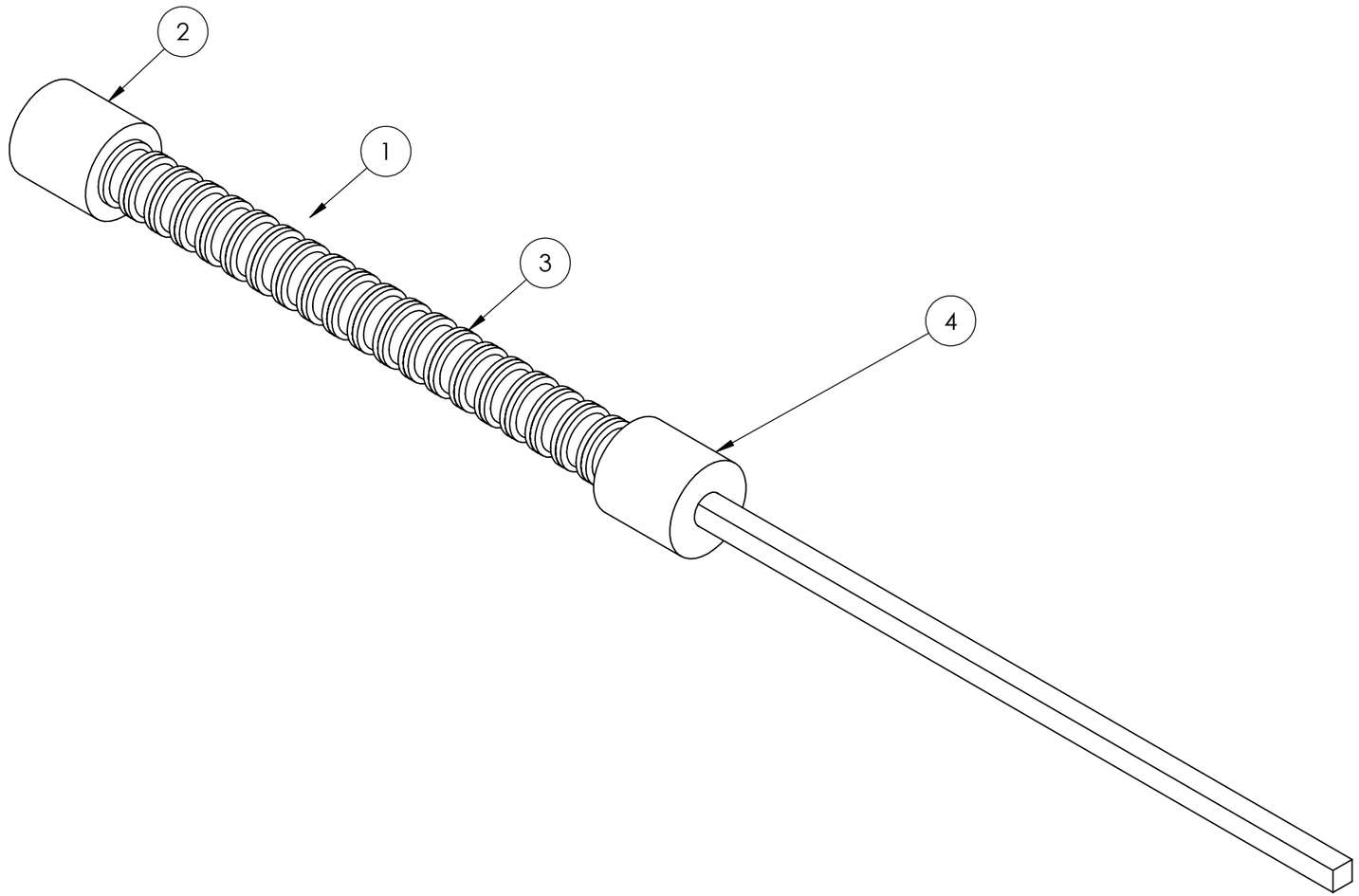

SolidWorks Student Edition.
For Academic Use Only.

DWG NOTES: (UNLESS OTHERWISE NOTED)
1) ALL UNITS: INCHES
2) < FILL IN NOTES HERE >

MATERIAL: STEEL

TOLERANCES (UNLESS NOTED)
DECIMAL: X.X : ±0.015, X.XX : ±0.01, X.XXX : ±0.005
FRACTIONAL: ±1/32
NO. PARTS REQ'D: 1

RENSSELAER POLYTECHNIC INSTITUTE

MOTOR DRIVE BELT CARRIER FIXTURE

DRAWN BY: SETH WRAIGHT
E-MAIL: WRAIGS@RPI.EDU **PHONE:** (607)342-1812
FACULTY ADVISOR: Samuel Chiaponne **CHECKED: (INITIALS)**
SIZE **B** | **COURSE NAME/NUMBER:** MP&S A Team | SECTION D
DATE: Monday, February 25, 2013 8:43:19 PM
SCALE 1:1 | CAD FILE: 12CandyA_MotorDriveBeltFixture600_PF600_010225 | SHEET 1 OF 1

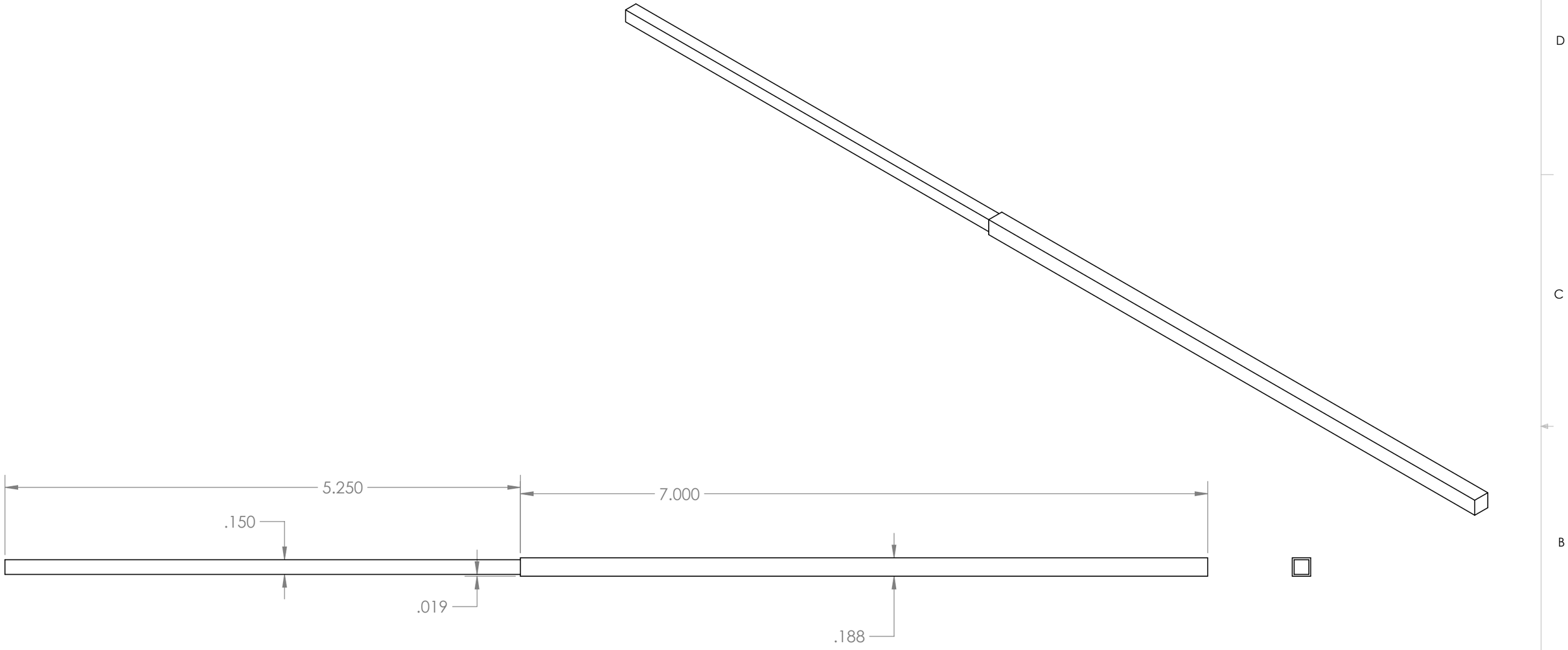

SolidWorks Student Edition.
For Academic Use Only.

DWG NOTES: (UNLESS OTHERWISE NOTED)
1) ALL UNITS: INCHES
2) < FILL IN NOTES HERE >

MATERIAL: STEEL

TOLERANCES (UNLESS NOTED)

DECIMAL: X.X : ±0.015
X.XX : ±0.01
X.XXX : ±0.005

FRACTIONAL: ±1/32

NO. PARTS REQ'D: 1

RENSSELAER POLYTECHNIC INSTITUTE

MOTOR DRIVE BELT CARRIER FIXTURE BODY

DRAWN BY: SETH WRAIGHT

E-MAIL: WRAIGS@RPI.EDU **PHONE:** (607)342-1812

FACULTY ADVISOR: Samuel Chiaponne **CHECKED: (INITIALS)**

SIZE **B** **COURSE NAME/NUMBER:** MP&S A Team SECTION D

DATE: Monday, February 25, 2013 8:43:19 PM

SCALE 1:1 CAD FILE: 12CandyA_MotorDriveBeltFixture60_PF60_010225 SHEET 20 OF 60

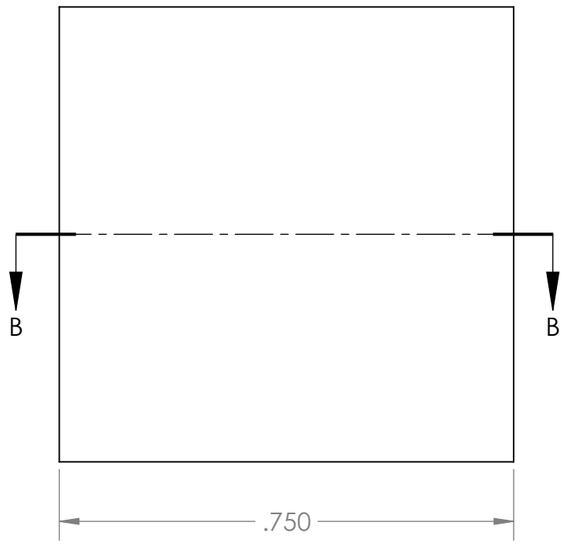

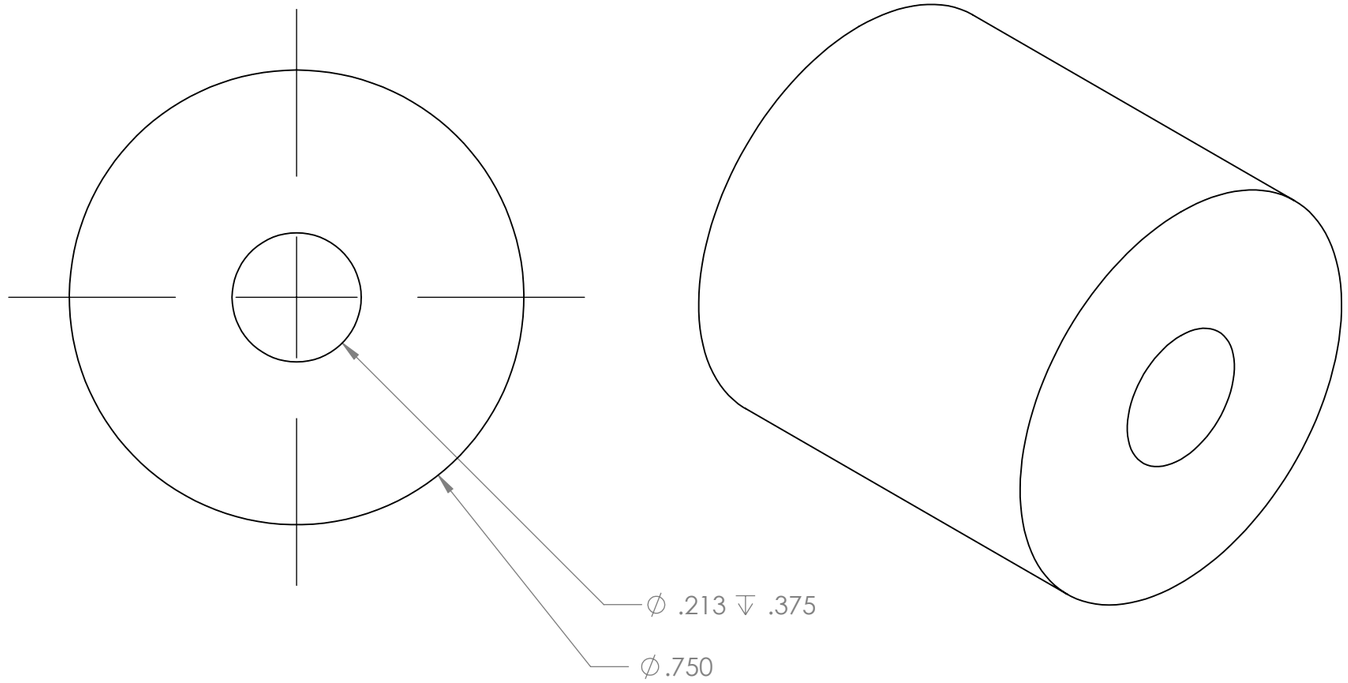

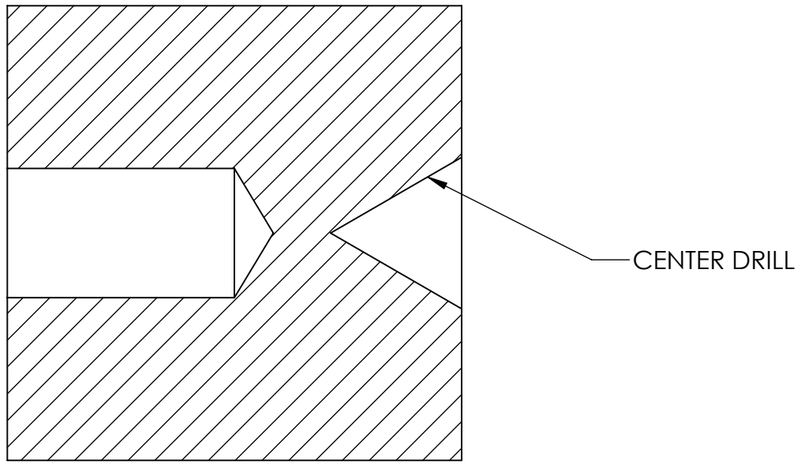

SECTION B-B
SCALE 4 : 1

SolidWorks Student Edition.
For Academic Use Only.

DWG NOTES: (UNLESS OTHERWISE NOTED)
1) ALL UNITS: INCHES
2) < FILL IN NOTES HERE >

MATERIAL: STEEL

TOLERANCES (UNLESS NOTED)

DECIMAL: X.X : ±0.015
X.XX : ±0.01
X.XXX : ±0.005

FRACTIONAL: ±1/32

NO. PARTS REQ'D: 1

RENSSELAER POLYTECHNIC INSTITUTE

MOTOR DRIVE BELT CARRIER FIXTURE CAP

DRAWN BY: SETH WRAIGHT

E-MAIL: WRAIGS@RPI.EDU **PHONE:** (607)342-1812

FACULTY ADVISOR: Samuel Chiaponne **CHECKED: (INITIALS)**

SIZE **B** | **COURSE NAME/NUMBER:** MP&S A Team | SECTION D

DATE: Monday, February 25, 2013 8:43:19 PM

SCALE 4:1 | CAD FILE: 12CandyA_MotorDriveBeltFixture60_PF60_010225 | SHEET 30 OF 60

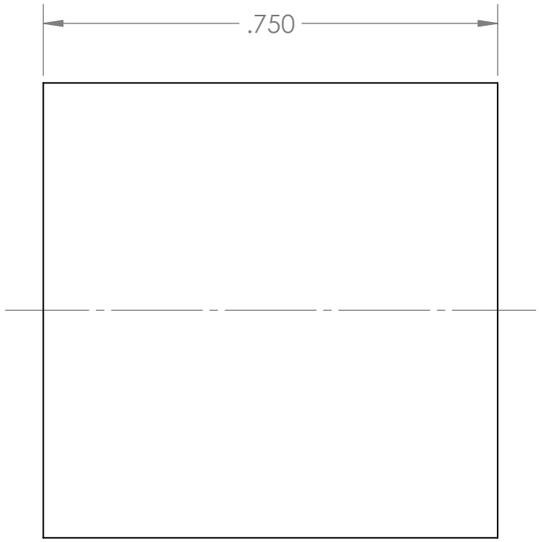

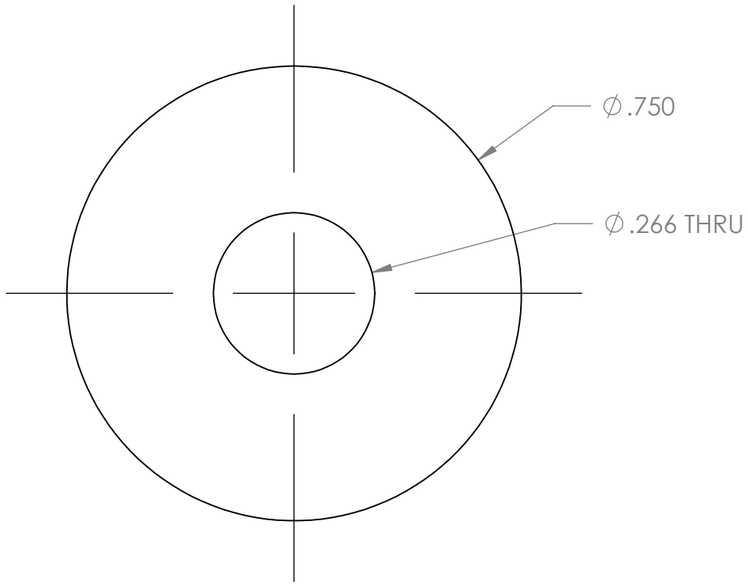

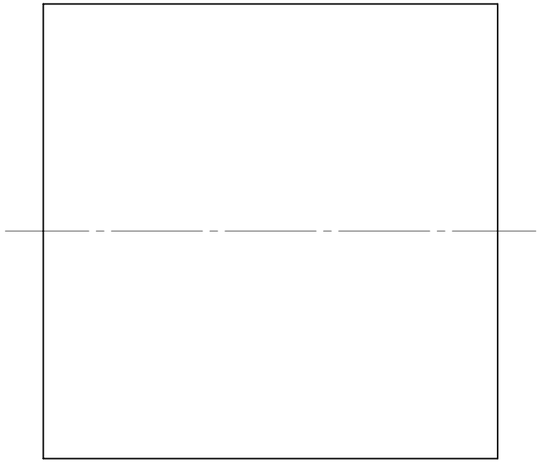

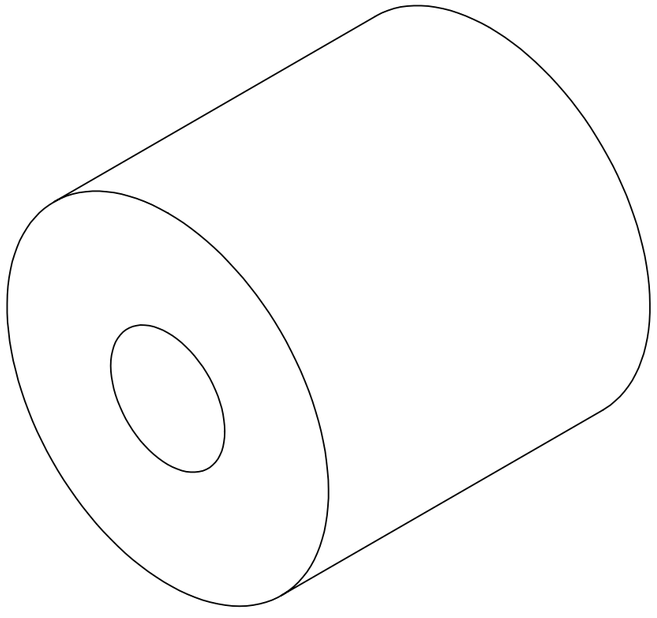

SolidWorks Student Edition.
For Academic Use Only.

DWG NOTES: (UNLESS OTHERWISE NOTED)
1) ALL UNITS: INCHES
2) MAX RADII (UNLESS NOTED) 0.03125"
3) BREAK ALL SHARP EDGES

MATERIAL: ALUMINIUM 6061

TOLERANCES (UNLESS NOTED)

DECIMAL: X.X : ±0.015
X.XX : ±0.01
X.XXX : ±0.005

FRACTIONAL: ±1/32

NO. PARTS REQ'D: 400

RENSSELAER POLYTECHNIC INSTITUTE

MOTOR DRIVE BELT CARRIER THRU BODY

DRAWN BY: Patrick Pilvines

E-MAIL: pilvip@rpi.edu **PHONE:** (339) 364 - 1707

FACULTY ADVISOR: Samuel Chiaponne **CHECKED: (INITIALS)**

SIZE **B** | **COURSE NAME/NUMBER:** MP&S Delta Team | SECTION D

DATE: Monday, February 25, 2013 8:43:19 PM

SCALE 4:1 | CAD FILE: 12CandyA_MotorDriveBeltFixture600 | SHEET 4 OF 4

ITEM NO.	PART NUMBER	DESCRIPTION	QTY.
1	12CandyA_PackagingSupportPlate201_PF201_011206	SUPPORT PLATE	1
2	12CandyA_PackagingFoot202_PF202_011206	FOOT	4

REVISIONS				
ZONE	REV.	DESCRIPTION	DATE	APPROVED
	A	INITIAL RELEASE	5/5/2013	S.W.

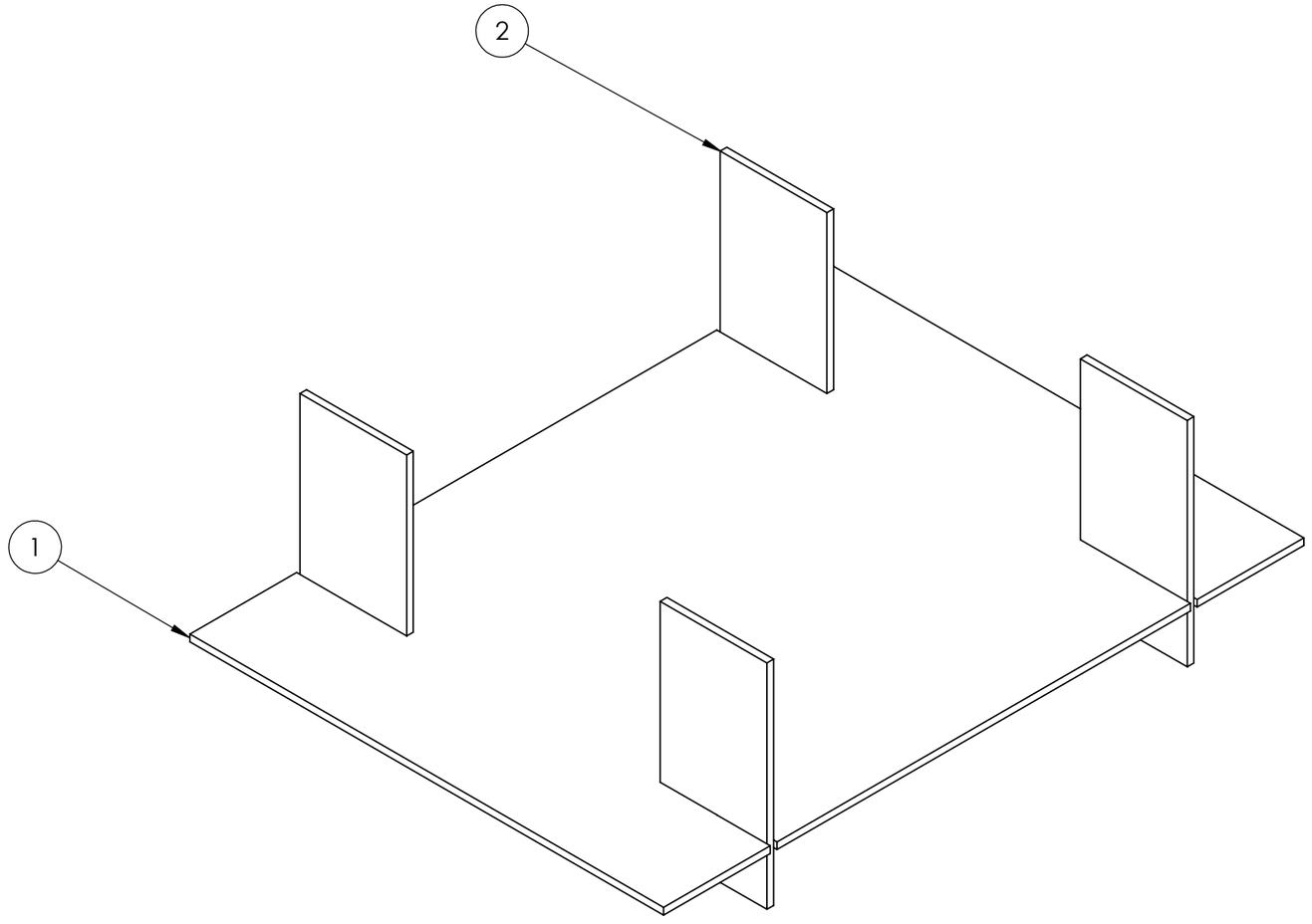

SolidWorks Student Edition.
For Academic Use Only.

DWG NOTES: (UNLESS OTHERWISE NOTED)
1) ALL UNITS: INCHES
2) < FILL IN NOTES HERE >

MATERIAL: ABS Plastic

TOLERANCES (UNLESS NOTED)

DECIMAL: X.X : ±0.015
X.XX : ±0.01
X.XXX : ±0.005

FRACTIONAL: ±1/32

NO. PARTS REQ'D: 1

RENSSELAER POLYTECHNIC INSTITUTE

PACKAGING SACRIFICAL LASER FIXTURE

DRAWN BY: Seth Wraight

E-MAIL: wraigs@rpi.edu **PHONE:** (607)342-1812

FACULTY ADVISOR: Samuel Chiaponne **CHECKED: (INITIALS)**

SIZE B | **COURSE NAME/NUMBER:** MP&S Ferris Wheel Team | SECTION D

DATE: Sunday, May 05, 2013 7:37:07 PM

SCALE 1:2 | CAD FILE: 12CandyA_PackagingLaserFixture200_PF200_011206 | SHEET 1 OF 3

REVISIONS				
ZONE	REV.	DESCRIPTION	DATE	APPROVED
	A	INITIAL RELEASE	5/5/2013	S.W.

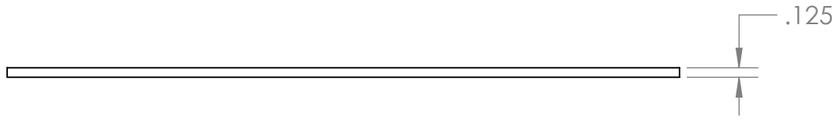

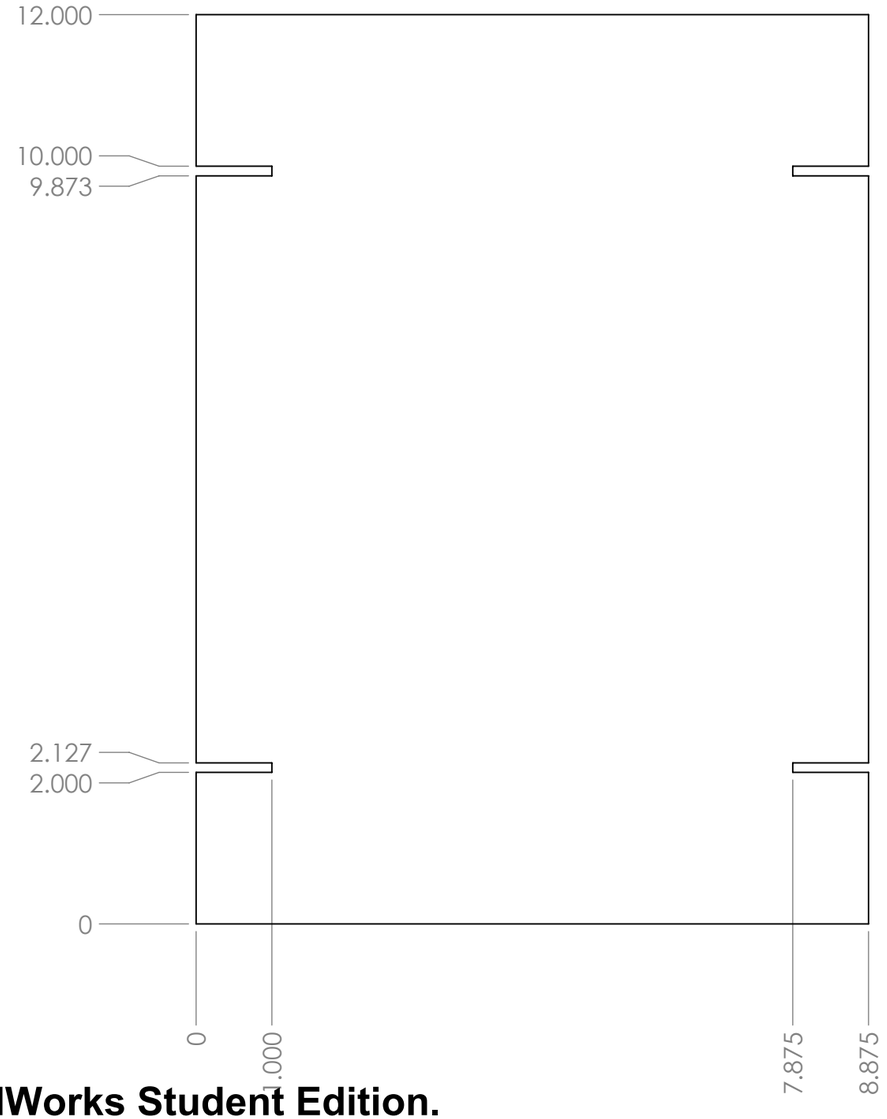

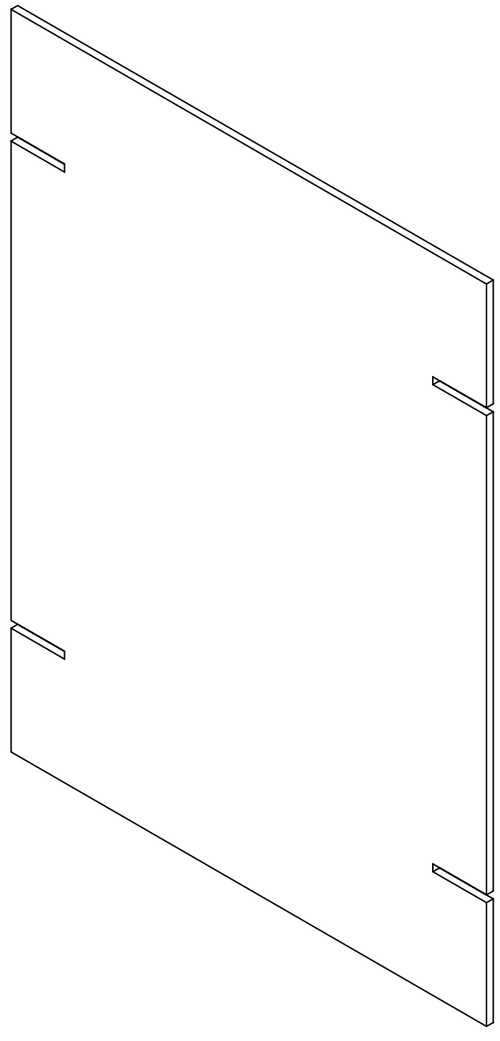

SolidWorks Student Edition.
For Academic Use Only.

DWG NOTES: (UNLESS OTHERWISE NOTED)
1) ALL UNITS: INCHES
2) < FILL IN NOTES HERE >

MATERIAL: ABS Plastic

TOLERANCES (UNLESS NOTED)
DECIMAL: X.X : ±0.015
X.XX : ±0.01
X.XXX : ±0.005
FRACTIONAL: ±1/32
NO. PARTS REQ'D: 1

RENSSELAER POLYTECHNIC INSTITUTE

PACKAGING SACRIFICAL LASER FIXTURE SUPPORT PLATE

DRAWN BY: Seth Wraight
E-MAIL: wraigs@rpi.edu **PHONE:** (607)342-1812
FACULTY ADVISOR: Samuel Chiaponne **CHECKED: (INITIALS)**
SIZE B | **COURSE NAME/NUMBER:** MP&S Ferris Wheel Team | SECTION D
DATE: Sunday, May 05, 2013 7:37:07 PM
SCALE 1:2 | CAD FILE: 12CandyA_PackagingLaserFixture200_FP200_011206 | SHEET 2 OF 3

REVISIONS				
ZONE	REV.	DESCRIPTION	DATE	APPROVED
	A	INITIAL RELEASE	5/5/2013	S.W.

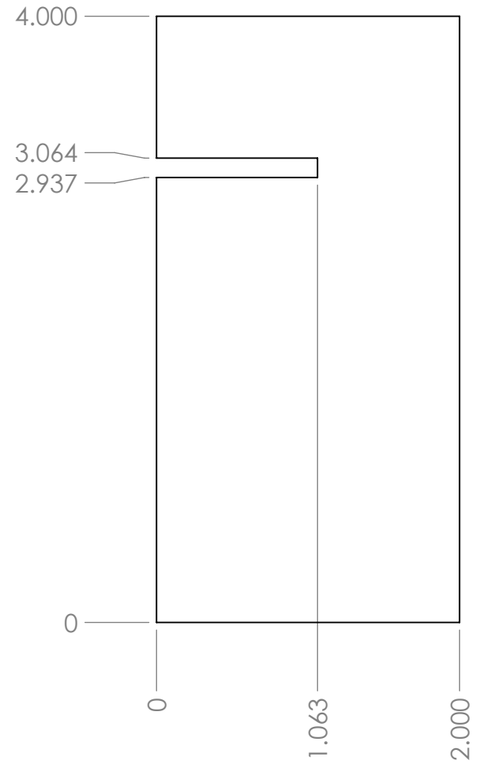

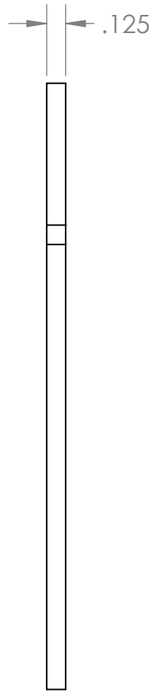

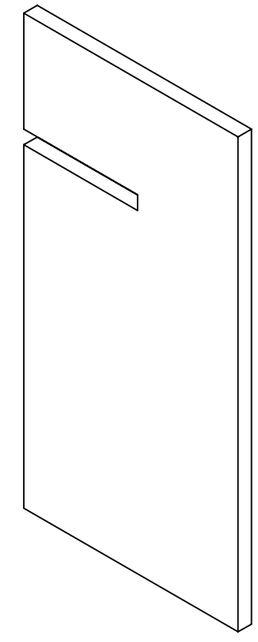

SolidWorks Student Edition.
For Academic Use Only.

DWG NOTES: (UNLESS OTHERWISE NOTED)
1) ALL UNITS: INCHES
2) < FILL IN NOTES HERE >

MATERIAL: ABS Plastic

TOLERANCES (UNLESS NOTED)

DECIMAL: X.X : ±0.015
X.XX : ±0.01
X.XXX : ±0.005

FRACTIONAL: ±1/32

NO. PARTS REQ'D: 1

RENSSELAER POLYTECHNIC INSTITUTE

PACKAGING SACRIFICAL LASER FIXTURE FOOT

DRAWN BY: Seth Wraight

E-MAIL: wraigs@rpi.edu **PHONE:** (607)342-1812

FACULTY ADVISOR: Samuel Chiaponne **CHECKED: (INITIALS)**

SIZE B | **COURSE NAME/NUMBER:** MP&S Ferris Wheel Team | SECTION D

DATE: Sunday, May 05, 2013 7:37:07 PM

SCALE 1:1 | CAD FILE: 12CandyA_PackagingLaserFixture200_FF200_011206 | SHEET 3 OF 3

ITEM NO.	PART NUMBER	DESCRIPTION	QTY.
1	12CandyA_UpperBaseLaserFixture401_PF401_011206	BASE PLATE	1
2	HBOLT 0.2500-20x3.5x0.75-N	HEX BOLT 1/4-20 X 3.5	1
3	HX-SHCS 0.25-20x3.25x1.25-N	HEX BOLT 1/4-20 X 3.25	10

REV.	DESCRIPTION	DATE	APPROVED
A	Initial Revision	3/20/2013	

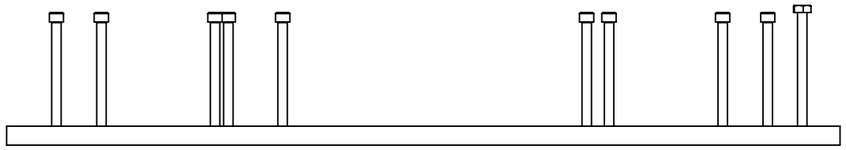

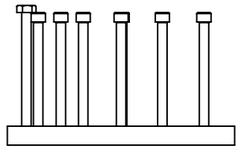

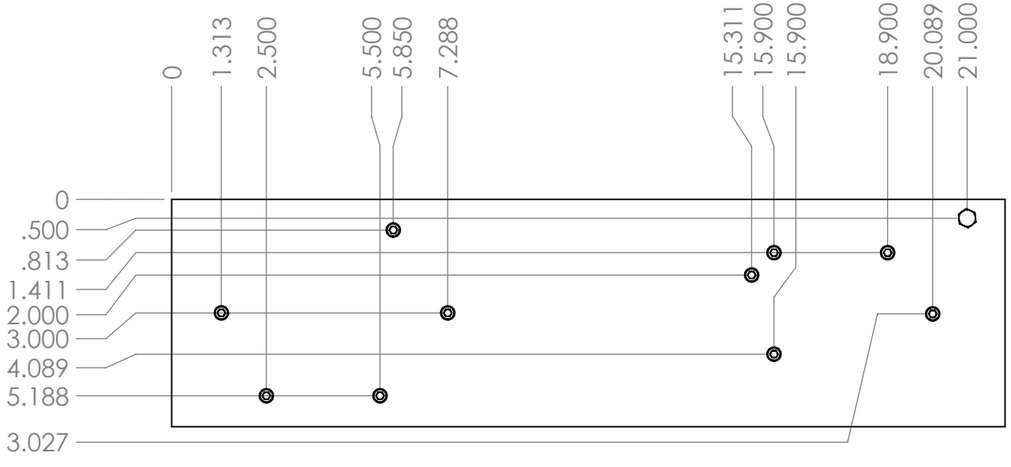

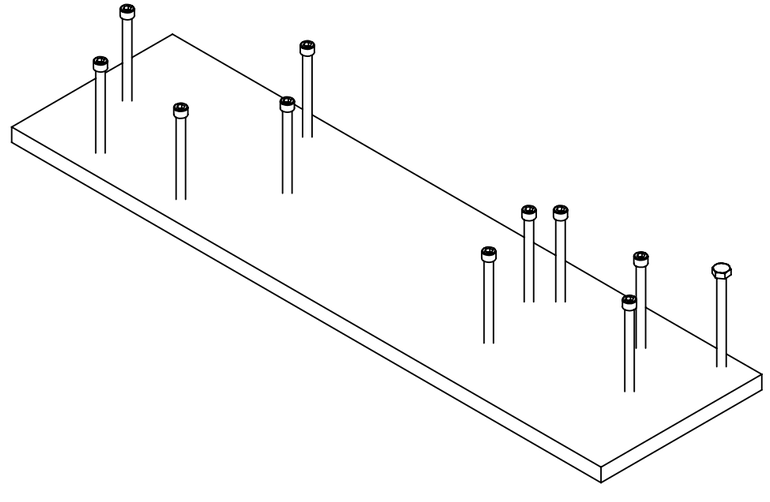

SolidWorks Student Edition.
For Academic Use Only.

DWG NOTES: (UNLESS OTHERWISE NOTED)
1) ALL UNITS: INCHES

MATERIAL: Polycarbonate

TOLERANCES (UNLESS NOTED)
DECIMAL: X.X : ±0.015, X.XX : ±0.01, X.XXX : ±0.005
FRACTIONAL: ±1/32

NO. PARTS REQ'D: 403

RENSSELAER POLYTECHNIC INSTITUTE

Upper Base Fixture Completed Assembly

DRAWN BY: Patrick E. Pilvines
E-MAIL: pilvip@rpi.edu **PHONE:** (339) 364 - 1707
FACULTY ADVISOR: Samuel Chiaponne **CHECKED:** PEP
SIZE B **COURSE NAME/NUMBER:** MP&S Ferris Wheel Team SECTION D
DATE: Wednesday, March 20, 2013 10:31:15 PM
SCALE 1:4 CAD FILE: 12CandyA_UpperBaseLaserFixture400_PF400_011206 SHEET 1 OF 1

REV.	DESCRIPTION	DATE	APPROVED
A	Initial Issue of Drawing	3/29/13	PEP

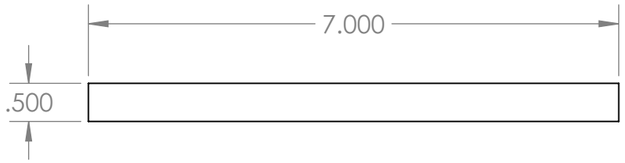

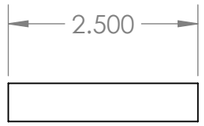

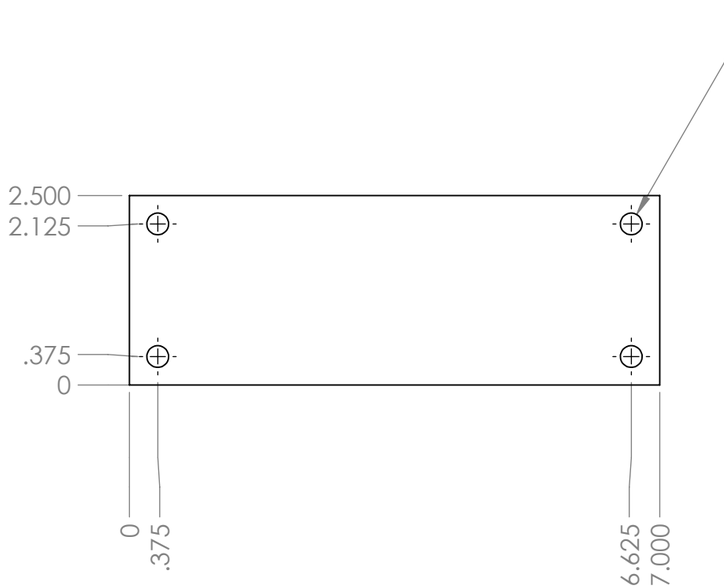

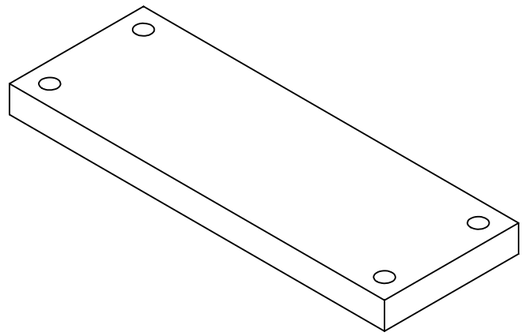

DWG NOTES: (UNLESS OTHERWISE NOTED)

1) ALL UNITS: INCHES
2) MAX RADII (UNLESS NOTED) 0.03125"
3) BREAK ALL SHARP EDGES

MATERIAL: Polycarbonate

TOLERANCES (UNLESS NOTED)

DECIMAL: X.X : ±0.015
X.XX : ±0.01
X.XXX : ±0.005

FRACTIONAL: ±1/32

NO. PARTS REQ'D: 400

RENSSELAER POLYTECHNIC INSTITUTE

Buffer Punch Support
12CandyA_BufferPunchSupport_010329

DRAWN BY: Patrick Pilvines

E-MAIL: pilvip@rpi.edu **PHONE:** (339) 364 - 1707

FACULTY ADVISOR: Samuel Chiaponne **CHECKED:** PEP

SIZE B | **COURSE NAME/NUMBER:** MP&S Delta Team | SECTION D

DATE: Friday, March 29, 2013 11:34:43 AM

SCALE 1:2 | CAD FILE: 12CandyA_BufferPunchSupport_010329 | SHEET 1 OF 1

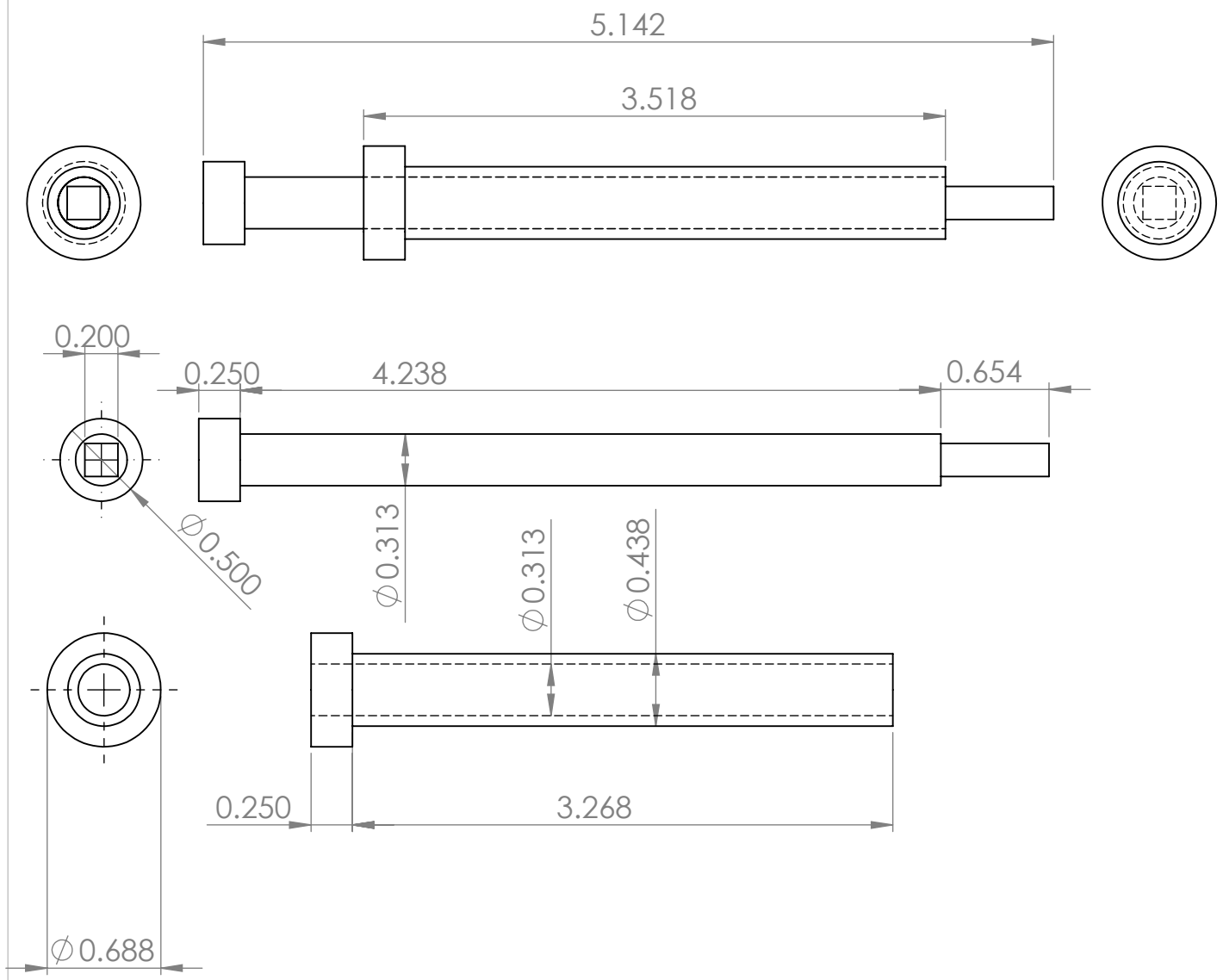

SolidWorks Student Edition.
For Academic Use Only.

DWG NOTES: (UNLESS OTHERWISE NOTED)
1) ALL UNITS: INCHES
2) < FILL IN NOTES HERE >

MATERIAL: Hardened Steel

TOLERANCES (UNLESS NOTED)

DECIMAL: X.X : ±0.015
X.XX : ±0.01
X.XXX : ±0.005

FRACTIONAL: ±1/32

NO. PARTS REQ'D: < # >

RENSSELAER POLYTECHNIC INSTITUTE

Mold A Carrier Ejector

DRAWN BY: Trevor Burtzos

E-MAIL: burtzt@rpi.edu **PHONE:** 503 816 8510

FACULTY ADVISOR: Samuel Chiaponne **CHECKED:** PEP

SIZE A | **COURSE NAME/NUMBER:** MP&S Ferris Wheel Team | SECTION D

DATE: Tuesday, February 12, 2013 1:11:10 AM

SCALE 1:1 | CAD FILE: aml_carrier_ejector | SHEET 1 OF 1

5 4 3 2 1

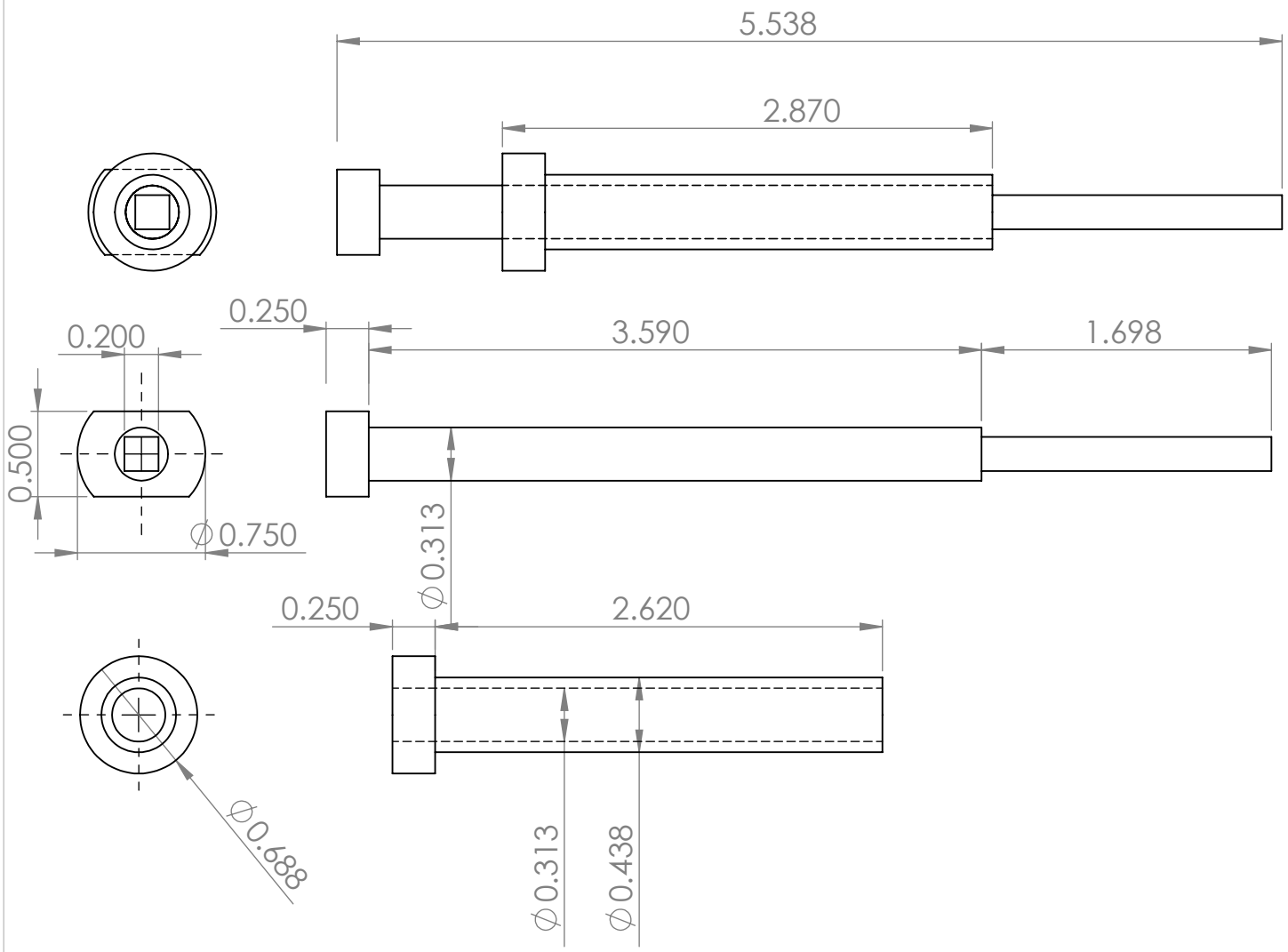

SolidWorks Student Edition.
For Academic Use Only.

DWG NOTES: (UNLESS OTHERWISE NOTED)
1) ALL UNITS: INCHES
2) < FILL IN NOTES HERE >

MATERIAL: Hardened Steel

TOLERANCES (UNLESS NOTED)

DECIMAL: X.X : ±0.015
X.XX : ±0.01
X.XXX : ±0.005

FRACTIONAL: ±1/32

NO. PARTS REQ'D: < # >

RENSSELAER POLYTECHNIC INSTITUTE

Mold A Jar Ejector

DRAWN BY: Trevor Burtzos

E-MAIL: burtzt@rpi.edu **PHONE:** 503 816 8510

FACULTY ADVISOR: Samuel Chiaponne **CHECKED:** PEP

SIZE A | **COURSE NAME/NUMBER:** MP&S Ferris Wheel Team | SECTION D

DATE: Tuesday, February 12, 2013 1:30:30 AM

SCALE 1:1 | CAD FILE: aml_jar_ejector | SHEET 1 OF 1

5 4 3 2 1

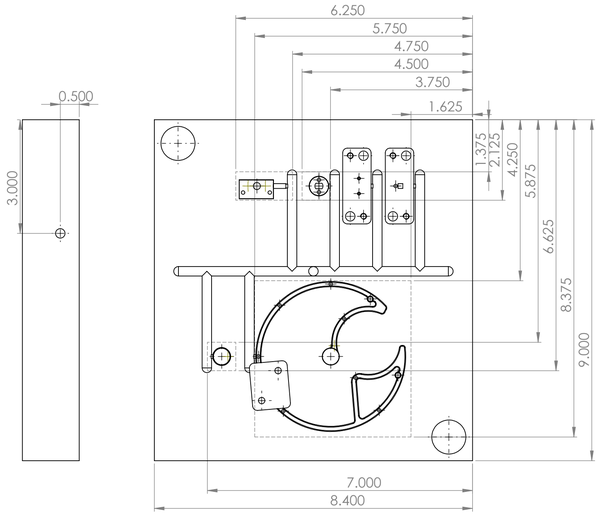

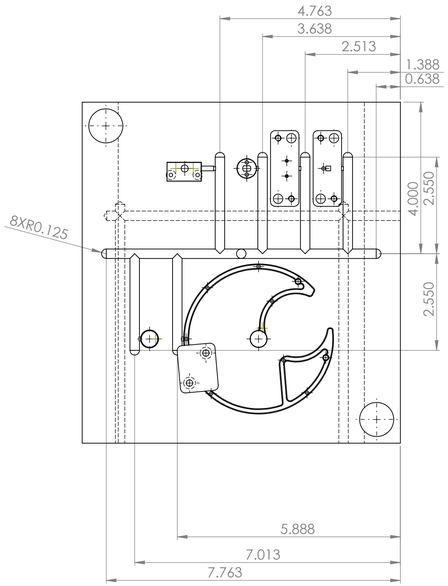

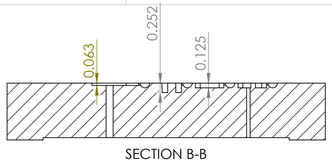

SECTION B-B

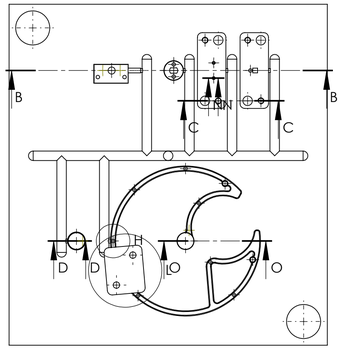

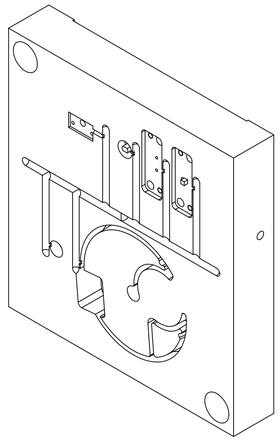

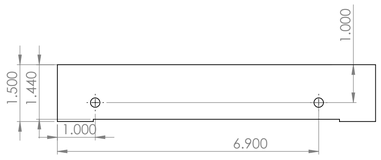

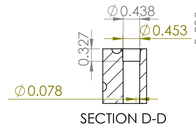

SECTION D-D

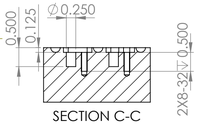

SECTION C-C

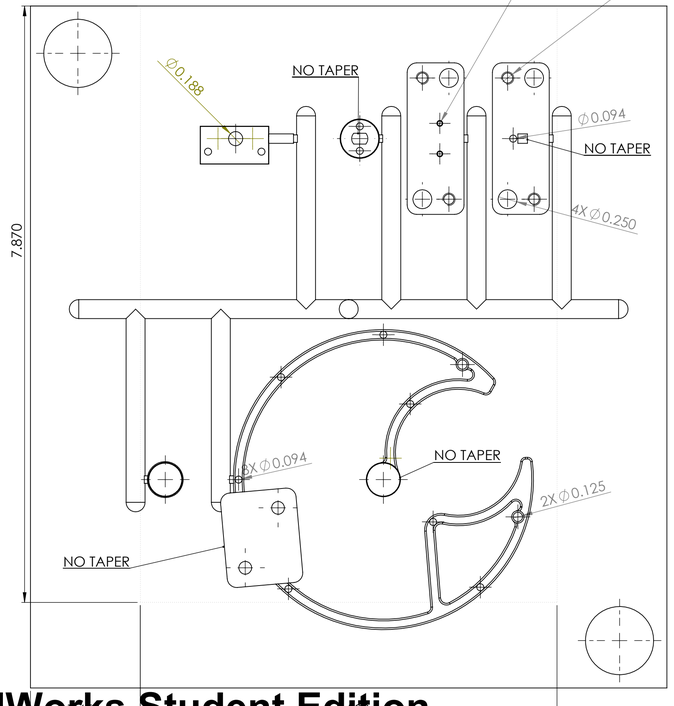

SCALE 1 : 1

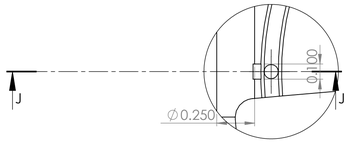

DETAIL H
SCALE 2 : 1

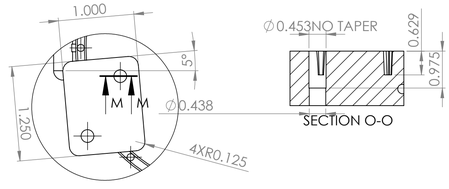

SECTION O-O

DETAIL L
SCALE 1 : 1

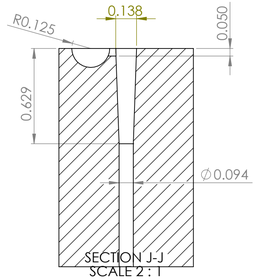

SECTION J-J
SCALE 2 : 1

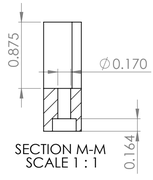

SECTION M-M
SCALE 1 : 1

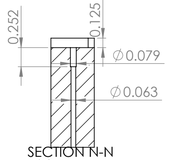

SECTION N-N
SCALE 1 : 1

NOTES
1. ALL CAVITIES TAPERED 2 DEGREES EXCEPT WHERE NOTED

DWG NOTES: (UNLESS OTHERWISE NOTED)
1) ALL UNITS: INCHES
2) < FILL IN NOTES HERE >

MATERIAL: Aluminum

TOLERANCES (UNLESS NOTED)
DECIMAL: X.X : ±0.015
X.XX : ±0.01
X.XXX : ±0.005
FRACTIONAL: ±1/32
NO. PARTS REQ'D: < # >

RENSSELAER POLYTECHNIC INSTITUTE

Mold A Moving

DRAWN BY: Trevor Burtzos
E-MAIL: burtzt@rpi.edu **PHONE:** 503 816 8510
FACULTY ADVISOR: Samuel Chiaponne **CHECKED:** P.I.P.

SIZE D | **COURSE NAME/NUMBER:** MP&S Ferris Wheel Team | SECTION: D
DATE: MONDay, FebruARy 04, 2013 12:03:54 PM
SCALE 1:2 | CAD FILE: 12GondolA_MoldA100_7100_0120a | SHEET 1 OF 1

SolidWorks Student Edition.
For Academic Use Only.

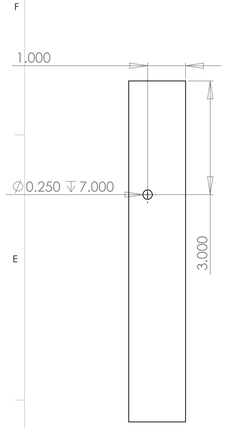

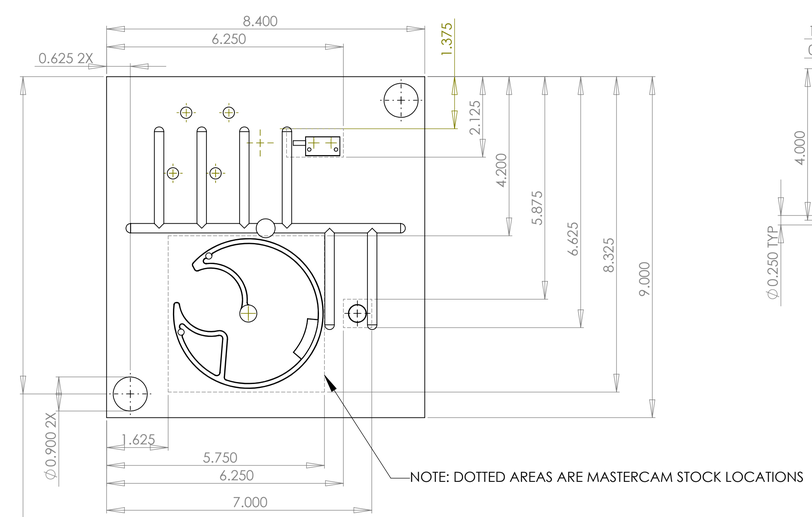

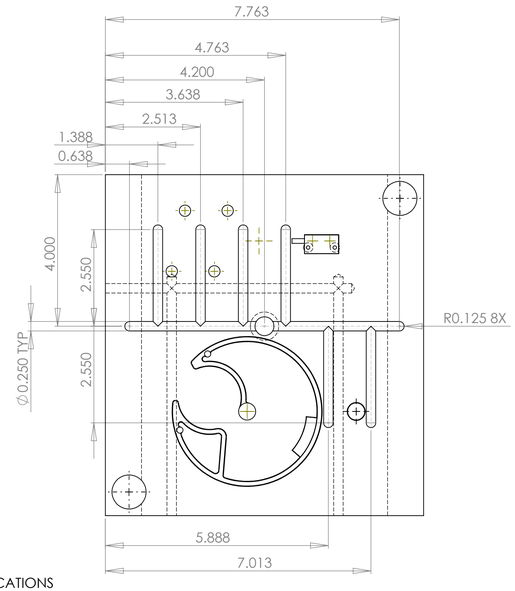

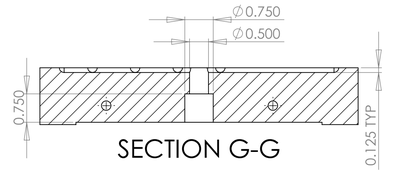

SECTION G-G

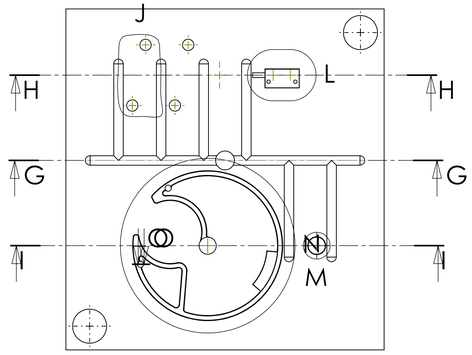

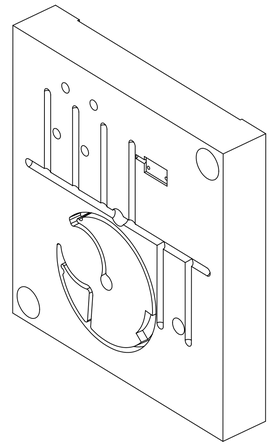

SCALE 1:2

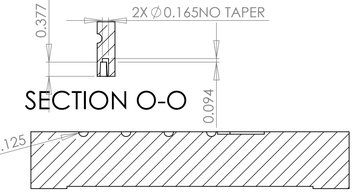

SECTION O-O

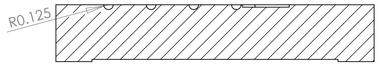

SECTION H-H

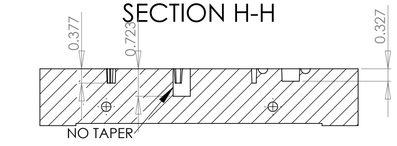

SECTION I-I

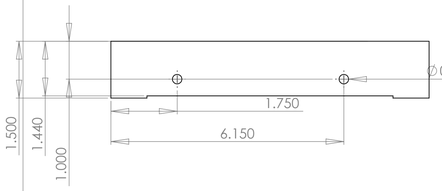

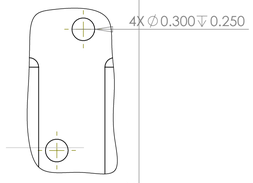

DETAIL J
SCALE 1 : 1

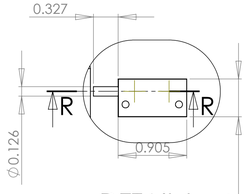

DETAIL L
SCALE 1 : 1

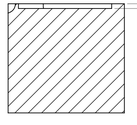

SECTION R-R
SCALE 1 : 1

DETAIL M
SCALE 1 : 1

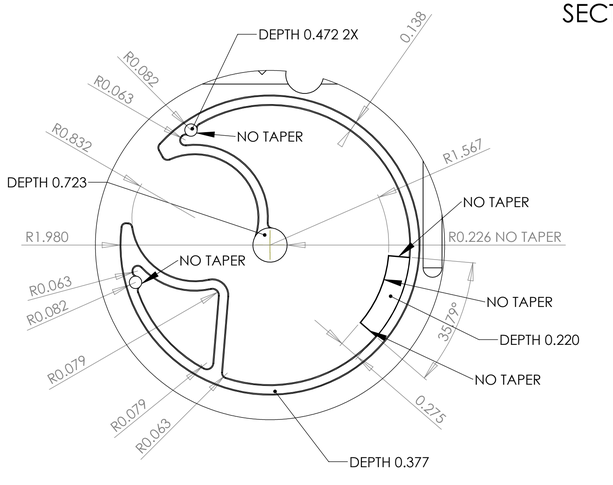

DETAIL N
SCALE 1 : 1

SolidWorks Student Edition.
For Academic Use Only.

MATERIAL: Aluminum	**RENSSELAER POLYTECHNIC INSTITUTE**
TOLERANCES (UNLESS NOTED)	**Mold A Stationary**
DECIMAL: X.X ±0.015 / X.XX ±0.01 / X.XXX ±0.005	**DRAWN BY:** Trevor Burtzos
FRACTIONAL: ±1/32	**E-MAIL:** burtzt@rpi.edu **PHONE:** 503 816 8510
NO. PARTS REQ'D: 1	**FACULTY ADVISOR:** Samuel Chiaponne **CHECKED:** PEP
DWG NOTES: (UNLESS OTHERWISE NOTED) 1) ALL UNITS: INCHES 2) ALL CAVITIES TAPERED 2 DEGREES EXCEPT WHERE NOTED	SIZE D · **COURSE NAME/NUMBER:** MP&S Ferris Wheel Team · SECTION: 0 · **DATE:** WEDNESDAY, JANUARY 30, 2013 2:29:24 PM · SCALE 1:2 · CAD FILE: 12Candyfl_Mold#101_7100_01.SLDPRT · SHEET 1 OF 1

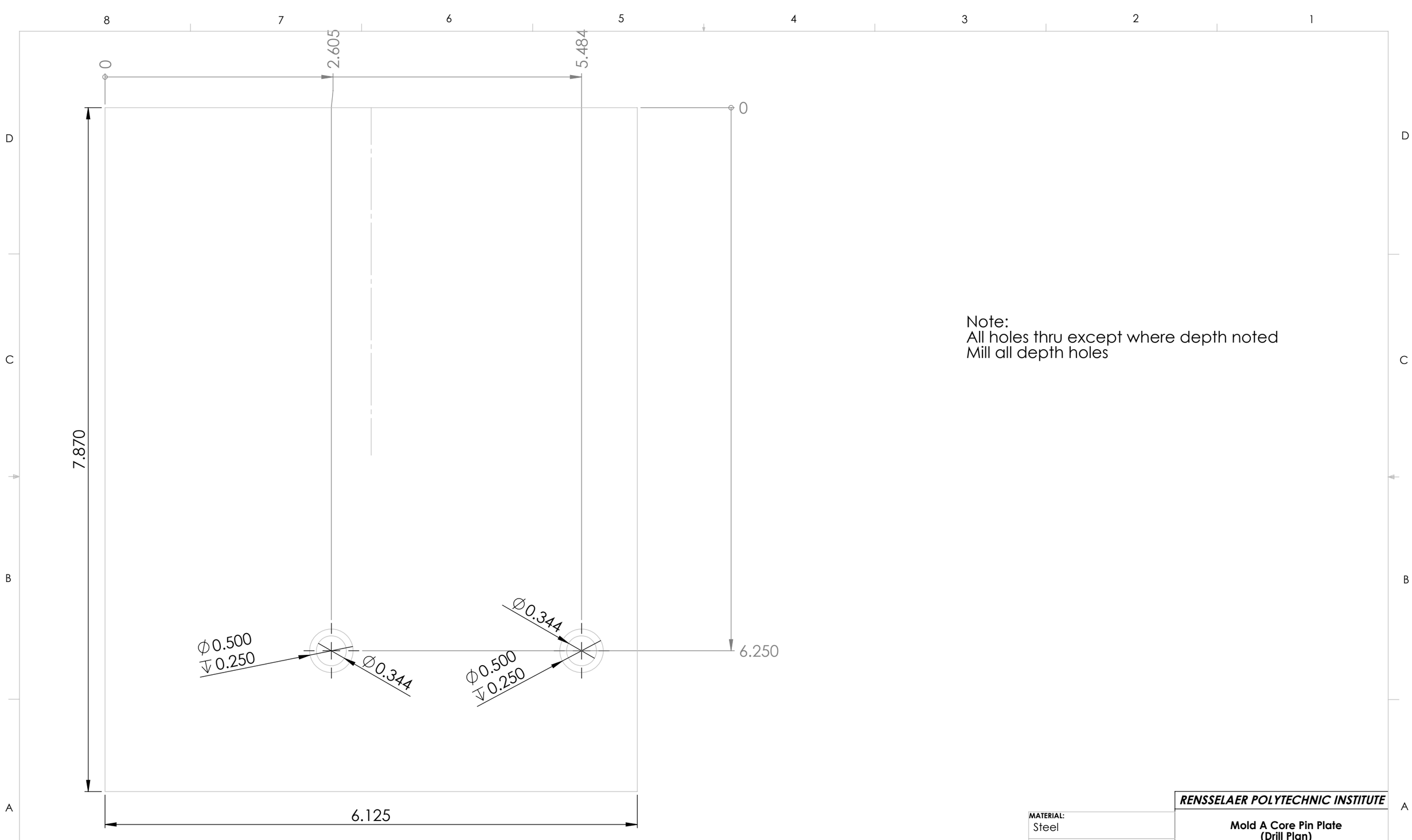

Note:
All holes thru except where depth noted
Mill all depth holes

SolidWorks Student Edition.
For Academic Use Only.

DWG NOTES: (UNLESS OTHERWISE NOTED)
1) ALL UNITS: INCHES
2) < FILL IN NOTES HERE >

MATERIAL: Steel

TOLERANCES (UNLESS NOTED)

DECIMAL:	X.X	±0.015
	X.XX	±0.01
	X.XXX	±0.005

FRACTIONAL: ±1/32

NO. PARTS REQ'D: < # >

RENSSELAER POLYTECHNIC INSTITUTE

Mold A Core Pin Plate (Drill Plan)

DRAWN BY: Trevor Burtzos
E-MAIL: burtzt@rpi.edu **PHONE:** 503 816 8510
FACULTY ADVISOR: Samuel Chiaponne **CHECKED: (INITIALS)**

SIZE B | **COURSE NAME/NUMBER:** MP&S Ferris Wheel Team | SECTION D
DATE: Tuesday, February 12, 2013 2:00:29 AM
SCALE 1:1 | CAD FILE: core_pin_plate | SHEET 1 OF 1

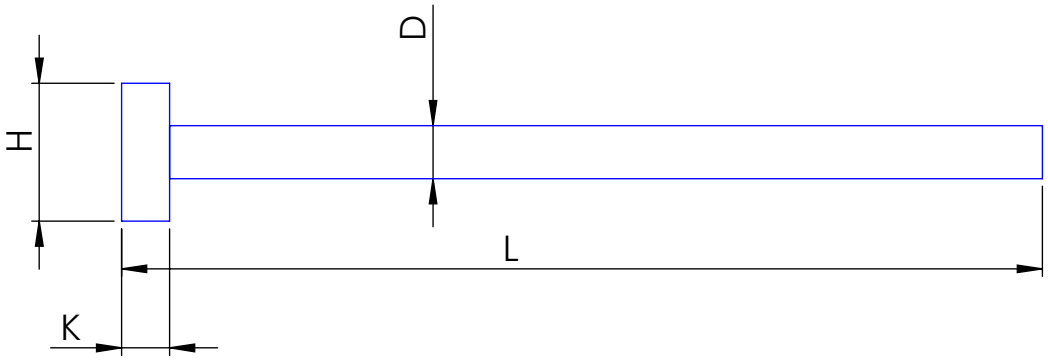

NOTES
1. See table for dimesions
2. All lengths L critical

Quantity	D	L	H	K
1	3/16	3.7821	.375	.187
2	1/8	3.1219	.25	.125
1	3/32	3.7200	.25	.125
2	3/32	3.5935	.25	.125
7	3/32	3.2163	.25	.125
2	1/16	3.4685	.25	.125

SolidWorks Student Edition.
For Academic Use Only.

DWG NOTES: (UNLESS OTHERWISE NOTED)
1) PART UNITS: INCHES
2) < FILL IN NOTES HERE >

MATERIAL: Case hardened Steel

TOLERANCES (UNLESS NOTED)

DECIMAL: X.X : ±0.015
X.XX : ±0.01
X.XXX : ±0.005

FRACTIONAL: ±1/32

NO. PARTS REQ'D: < # >

RENSSELAER POLYTECHNIC INSTITUTE

Mold A Ejector Pins

DRAWN BY: Trevor Burtzos
E-MAIL: burtzt@rpi.edu **PHONE:** 503 816 8510
FACULTY ADVISOR: Samuel Chiaponne **CHECKED: (INITIALS)**
SIZE **A** **COURSE NAME/NUMBER:** MP&S Ferris Wheel Team SECTION D
DATE: Tuesday, February 12, 2013 1:36:36 AM
SCALE 1:1 CAD FILE: ejector_a SHEET 1 OF 1

5 4 3 2 1

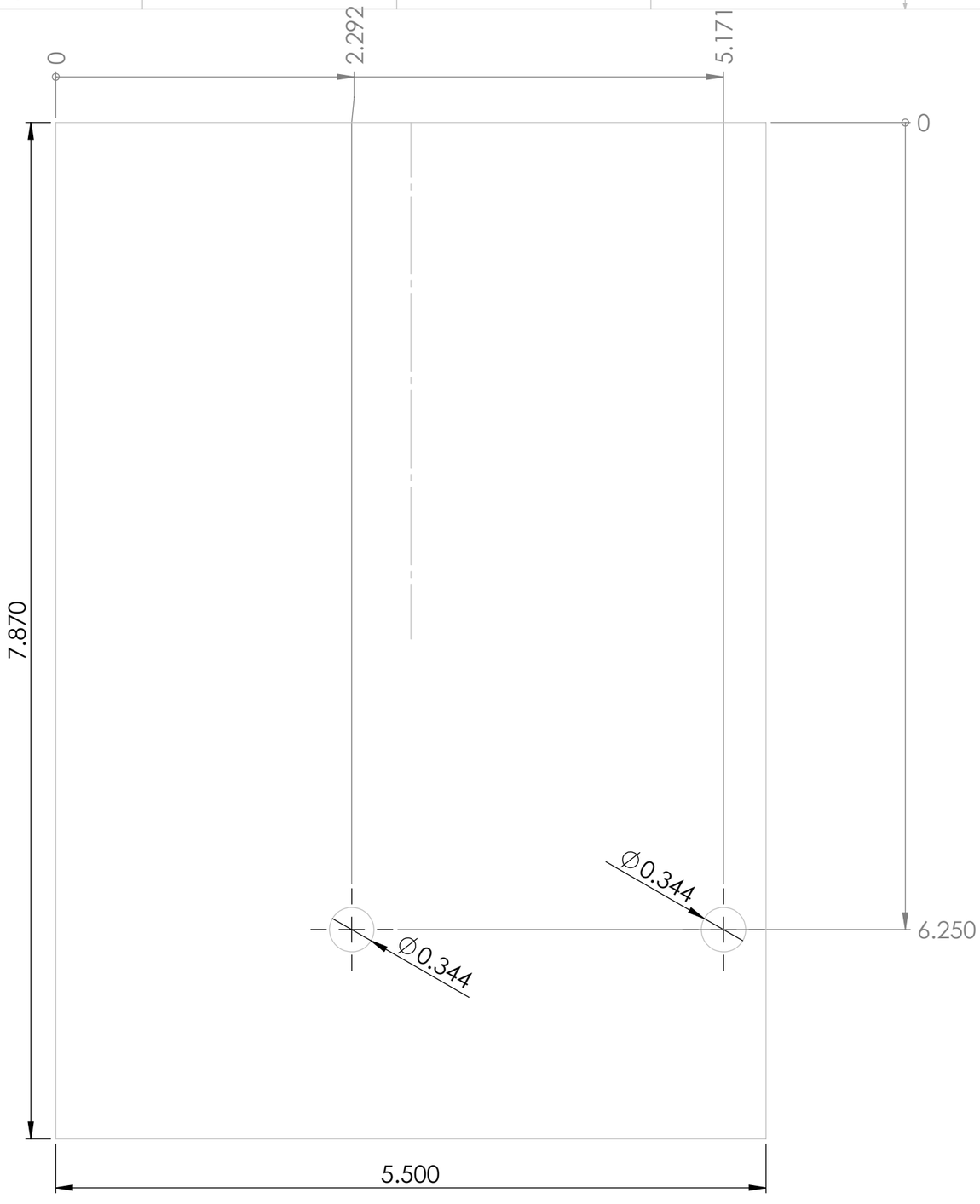

Note:
All holes thru

SolidWorks Student Edition.
For Academic Use Only.

DWG NOTES: (UNLESS OTHERWISE NOTED)
1) ALL UNITS: INCHES
2) < FILL IN NOTES HERE >

MATERIAL: Steel

TOLERANCES (UNLESS NOTED)
DECIMAL: X.X : ±0.015
X.XX : ±0.01
X.XXX : ±0.005
FRACTIONAL: ±1/32
NO. PARTS REQ'D: < # >

RENSSELAER POLYTECHNIC INSTITUTE

Mold A Ejector Plate

DRAWN BY: Trevor Burtzos
E-MAIL: burtzt@rpi.edu **PHONE:** 503 816 8510
FACULTY ADVISOR: Samuel Chiaponne **CHECKED: (INITIALS)**
SIZE B | **COURSE NAME/NUMBER:** MP&S Ferris Wheel Team | SECTION D
DATE: Tuesday, February 12, 2013 2:00:29 AM
SCALE 1:1 | CAD FILE: ejector_plate | SHEET 1 OF 1

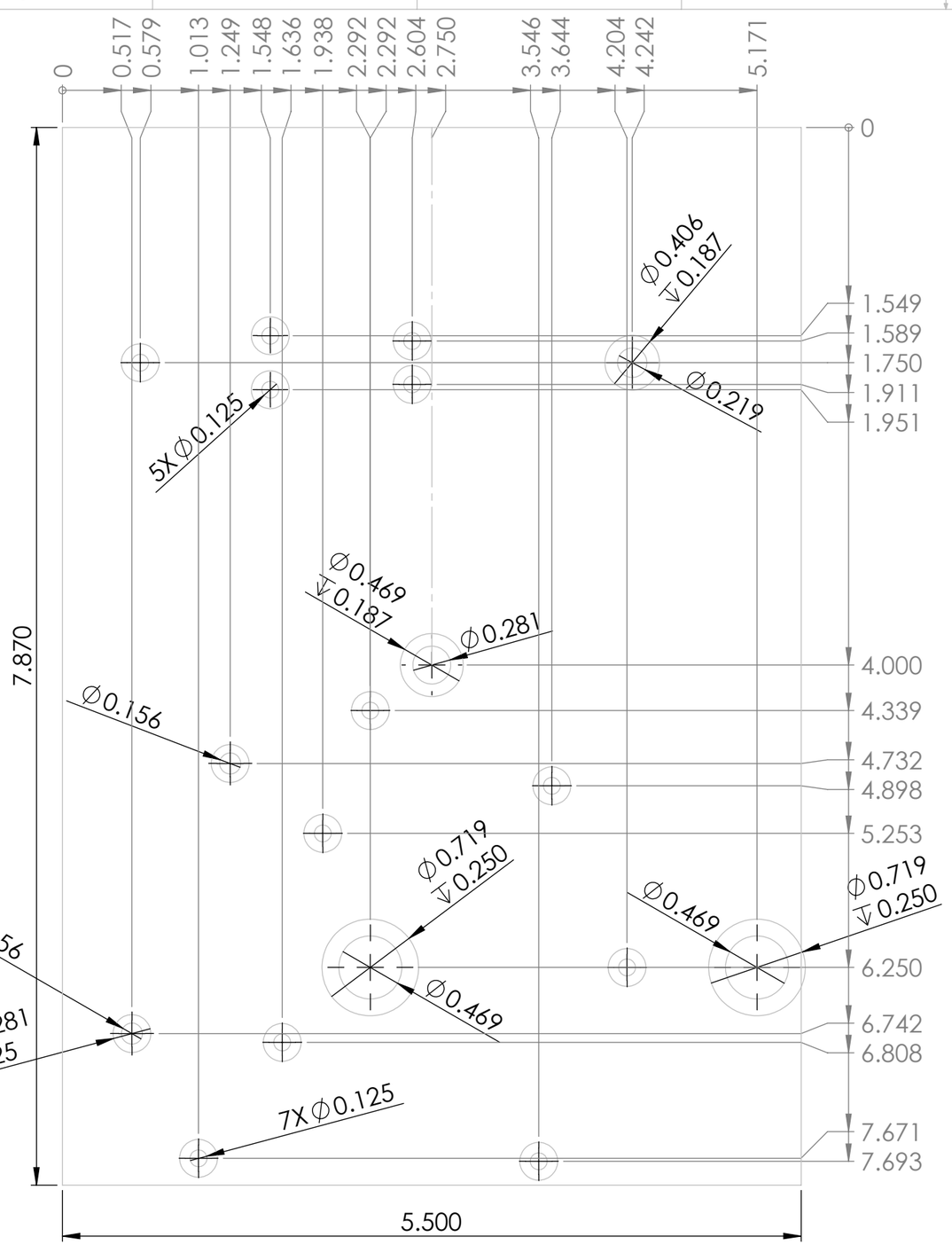

Note:
All holes thru except noted depth
Cut all depth cuts with end mill

SolidWorks Student Edition.
For Academic Use Only.

DWG NOTES: (UNLESS OTHERWISE NOTED)
1) ALL UNITS: INCHES
2) < FILL IN NOTES HERE >

MATERIAL: Steel

TOLERANCES (UNLESS NOTED)
DECIMAL: X.X : ±0.015, X.XX : ±0.01, X.XXX : ±0.005
FRACTIONAL: ±1/32
NO. PARTS REQ'D: < # >

RENSSELAER POLYTECHNIC INSTITUTE

Mold A Ejector Retainer Plate

DRAWN BY: Trevor Burtzos
E-MAIL: burtzt@rpi.edu **PHONE:** 503 816 8510
FACULTY ADVISOR: Samuel Chiaponne **CHECKED: (INITIALS)**
SIZE **B** **COURSE NAME/NUMBER:** MP&S Ferris Wheel Team SECTION D
DATE: Tuesday, February 12, 2013 2:00:29 AM
SCALE 1:1 CAD FILE: ejector_retainer_plate SHEET 1 OF 1

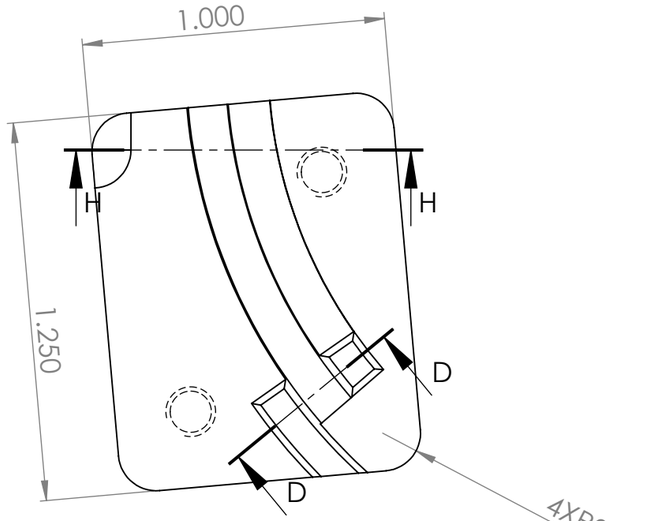

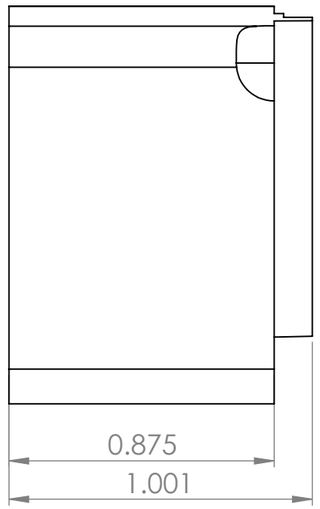

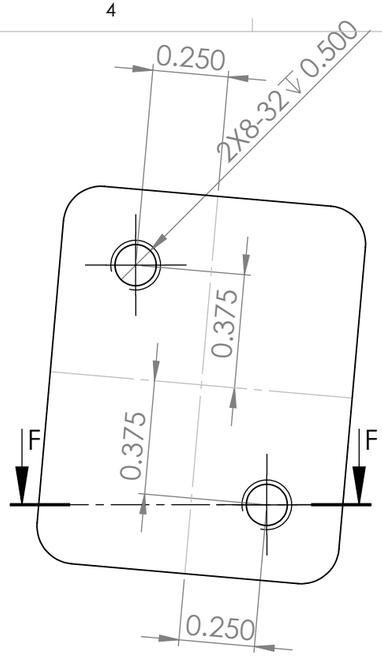

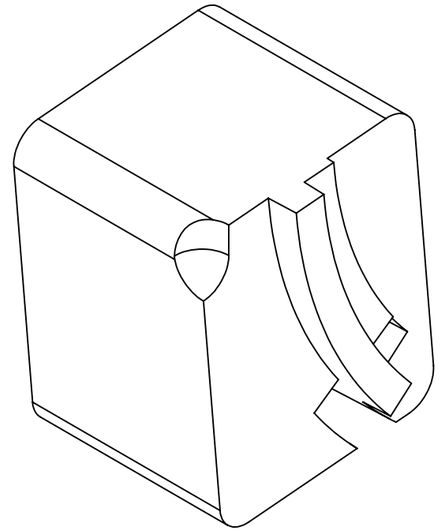

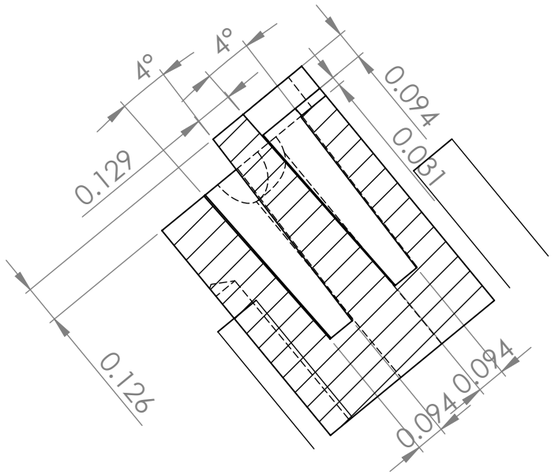

SECTION D-D

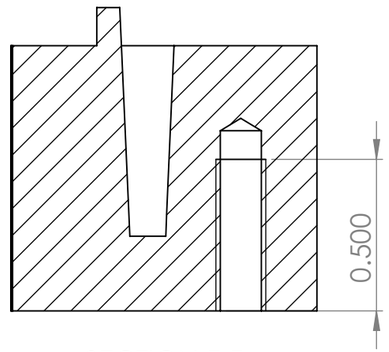

SECTION F-F

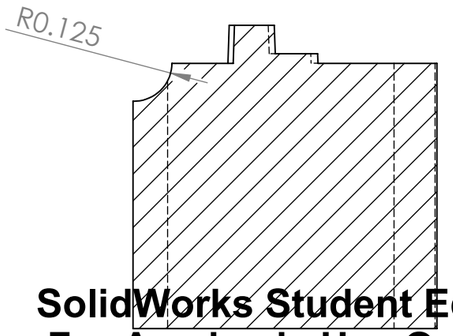

SECTION H-H

SolidWorks Student Edition.
For Academic Use Only.

DWG NOTES: (UNLESS OTHERWISE NOTED)
1) ALL UNITS: INCHES
2) < FILL IN NOTES HERE >

MATERIAL: Aluminum

TOLERANCES (UNLESS NOTED)

DECIMAL: X.X : ±0.015
X.XX : ±0.01
X.XXX : ±0.005

FRACTIONAL: ±1/32

NO. PARTS REQ'D: < # >

RENSSELAER POLYTECHNIC INSTITUTE

Mold A Jar Insert

DRAWN BY: Trevor Burtzos
E-MAIL: burtzt@rpi.edu **PHONE:** 503 816 8510
FACULTY ADVISOR: Samuel Chiaponne **CHECKED: (INITIALS)**
SIZE B | **COURSE NAME/NUMBER:** MP&S Ferris Wheel Team | SECTION D
DATE: Tuesday, February 05, 2013 9:27:05 AM
SCALE 2:1 | CAD FILE: jar_insert | SHEET 1 OF 1

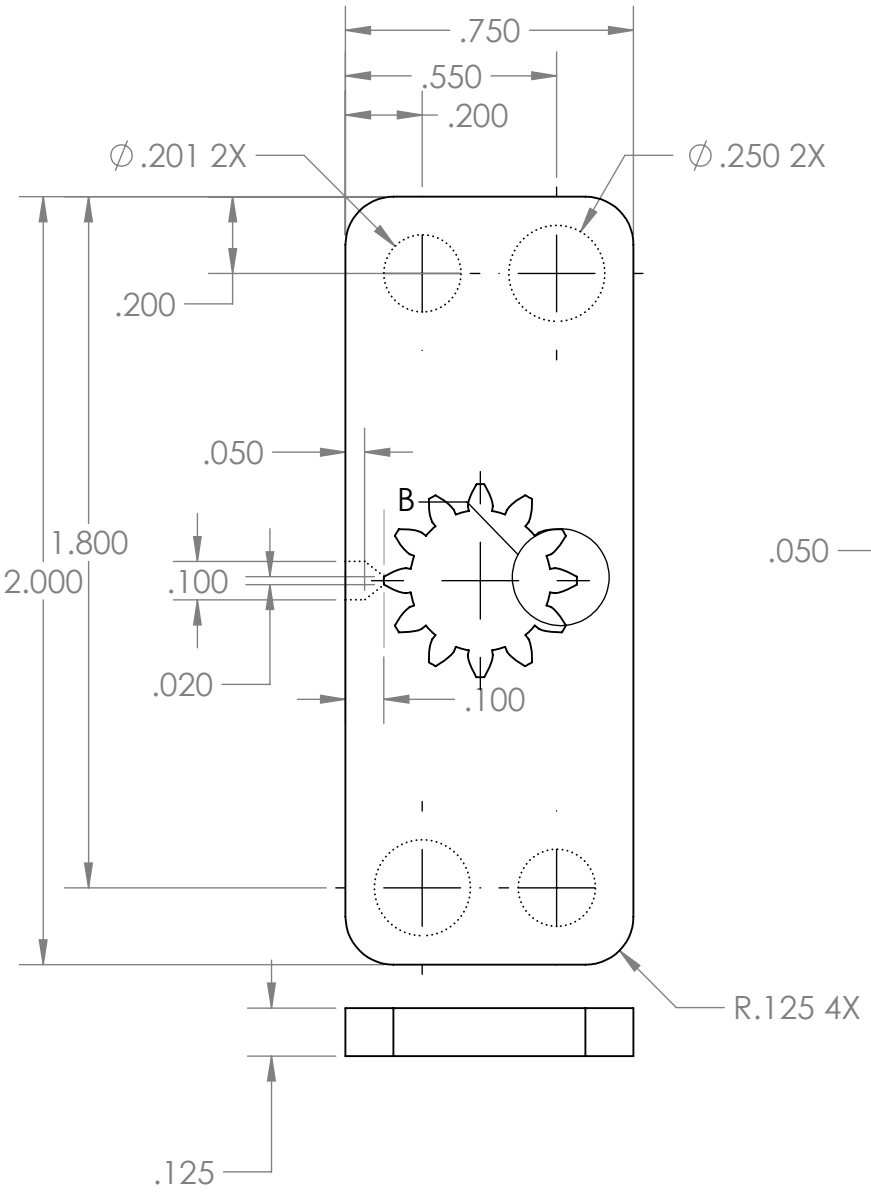

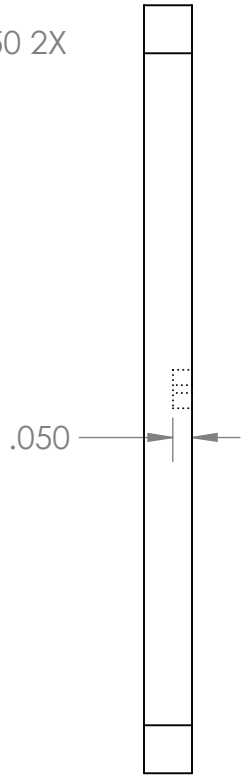

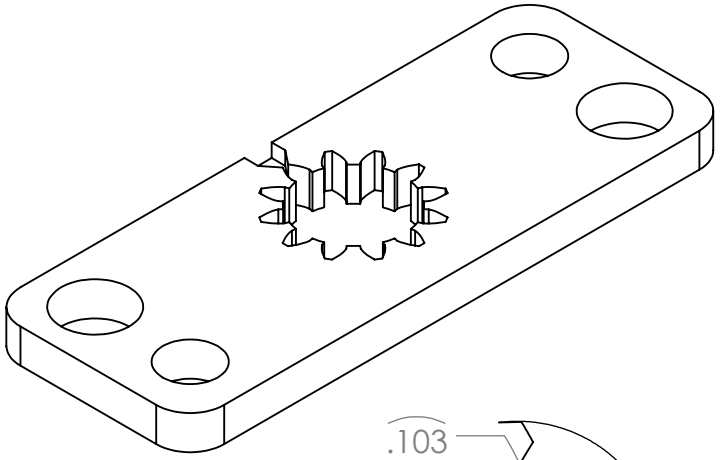

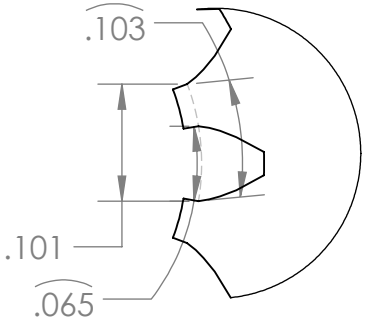

12 TEETH

DETAIL B
SCALE 6 : 1

NOTES
1. ALL DASHED FEATURES WILL BE MANUFACTURED IN THE MILL.

SolidWorks Student Edition.
For Academic Use Only.

DWG NOTES: (UNLESS OTHERWISE NOTED)
1) UNITS: INCHES
2) < FILL IN NOTES HERE >

MATERIAL: Steel

TOLERANCES (UNLESS NOTED)

DECIMAL:	X.X	:±0.015
	X.XX	:±0.01
	X.XXX	: ±0.005

FRACTIONAL: ±1/32

NO. PARTS REQ'D: < # >

RENSSELAER POLYTECHNIC INSTITUTE

Mold A Main Gear EDM Insert

DRAWN BY: Trevor Burtzos

E-MAIL: burtzt@rpi.edu **PHONE:** 503 816 8510

FACULTY ADVISOR: Samuel Chiaponne **CHECKED: (INITIALS)**

SIZE **A** | **COURSE NAME/NUMBER:** MP&S Ferris Wheel Team | SECTION D

DATE: Wednesday, January 30, 2013 11:36:34 PM

SCALE 2:1 | CAD FILE: maingear_EDM | SHEET 1 OF 1

5 4 3 2 1

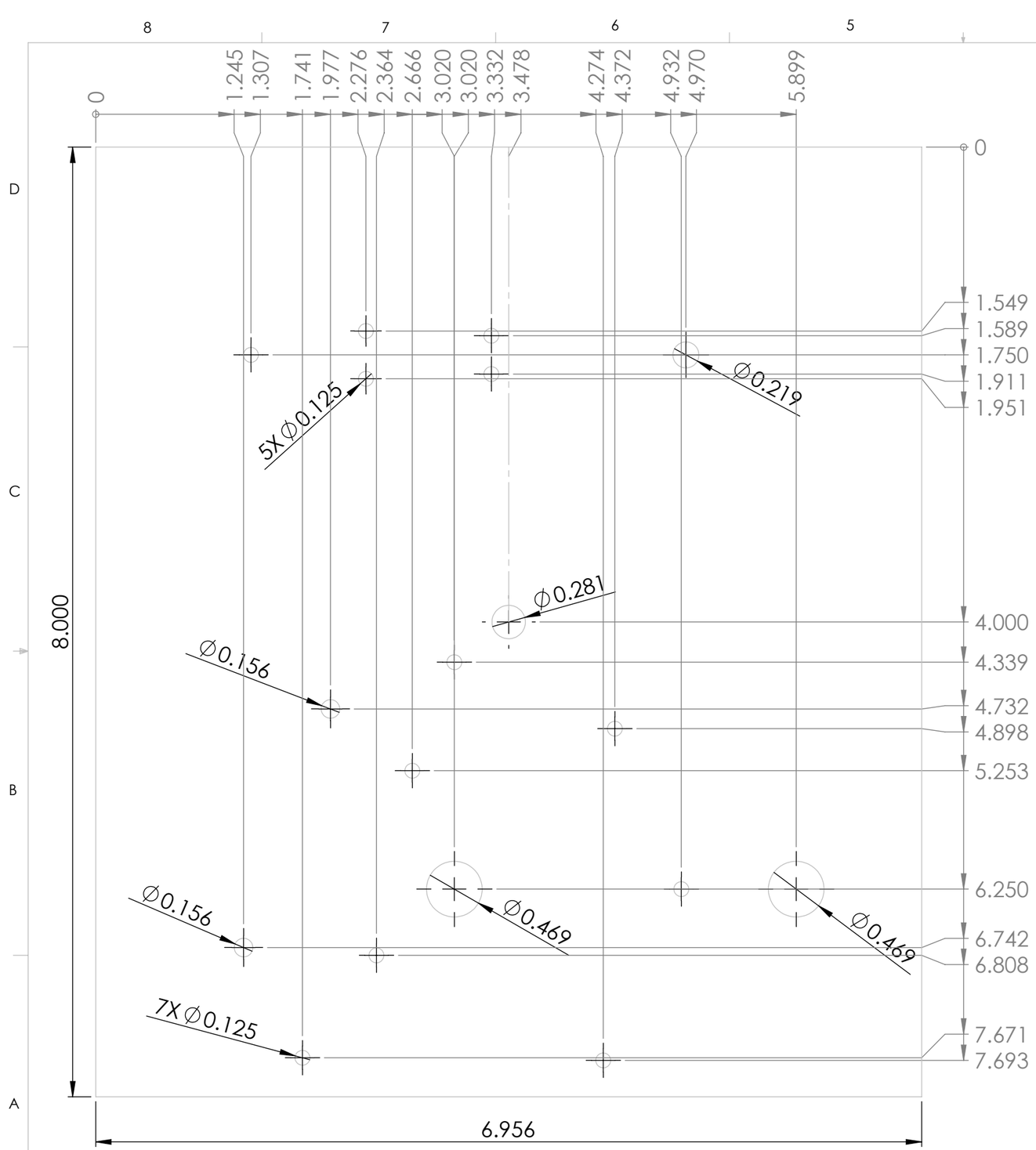

Note:
All holes thru

SolidWorks Student Edition.
For Academic Use Only.

DWG NOTES: (UNLESS OTHERWISE NOTED)
1) ALL UNITS: INCHES
2) < FILL IN NOTES HERE >

MATERIAL: Steel

TOLERANCES (UNLESS NOTED)
DECIMAL: X.X : ±0.015, X.XX : ±0.01, X.XXX : ±0.005
FRACTIONAL: ±1/32
NO. PARTS REQ'D: < # >

RENSSELAER POLYTECHNIC INSTITUTE

Mold A Moving Earplate

DRAWN BY: Trevor Burtzos
E-MAIL: burtzt@rpi.edu **PHONE:** 503 816 8510
FACULTY ADVISOR: Samuel Chiaponne **CHECKED: (INITIALS)**
SIZE **B** | **COURSE NAME/NUMBER:** MP&S Ferris Wheel Team | SECTION D
DATE: Tuesday, February 12, 2013 2:00:29 AM
SCALE 1:1 | CAD FILE: moving_earplate | SHEET 1 OF 1

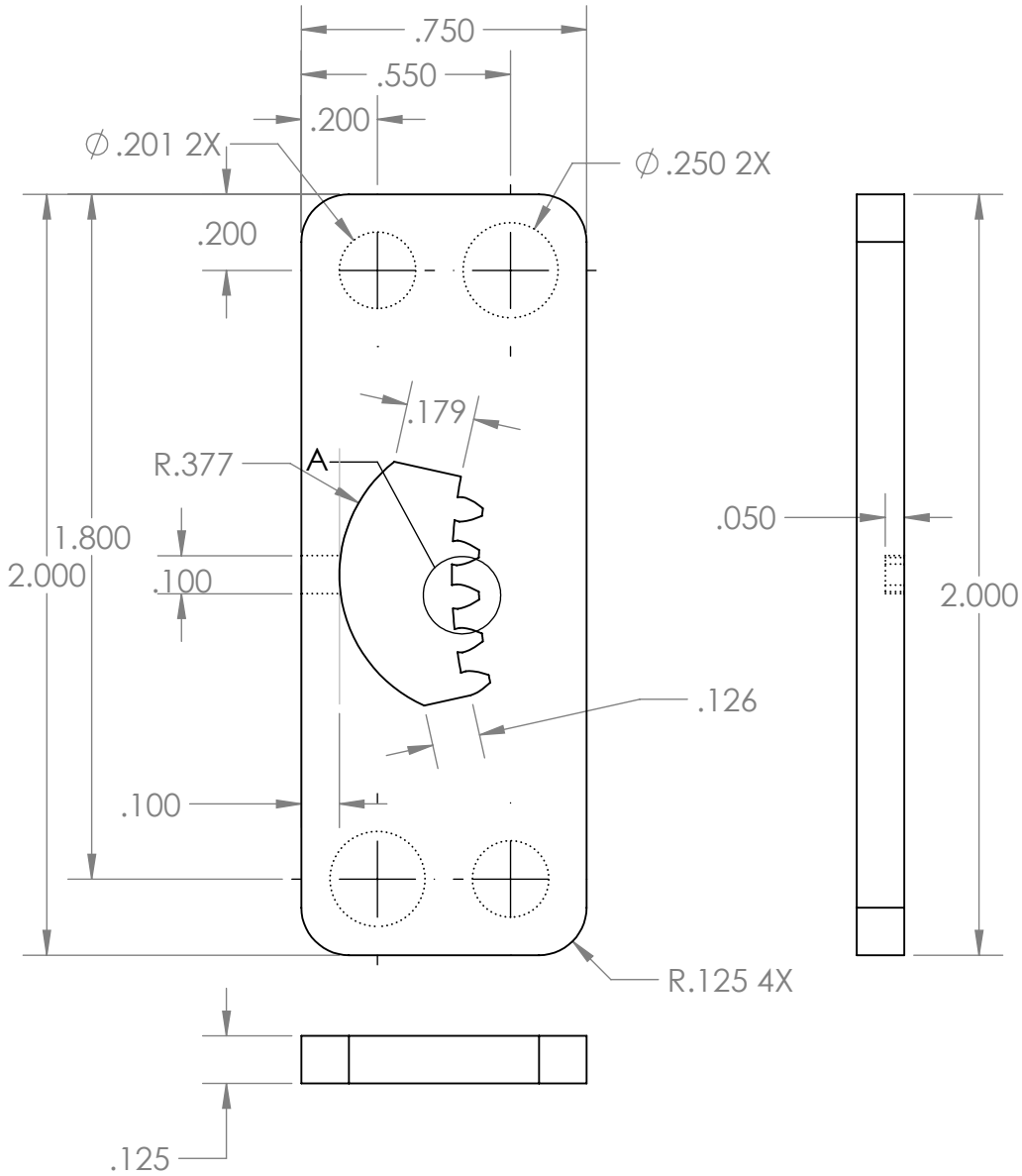

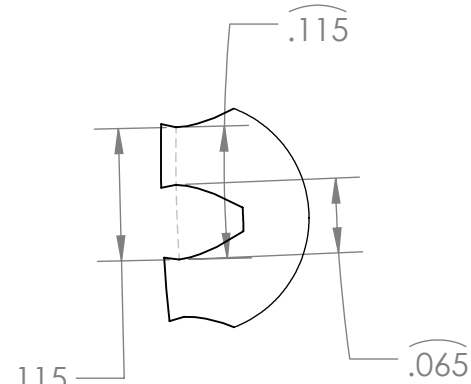

DETAIL A
SCALE 6 : 1

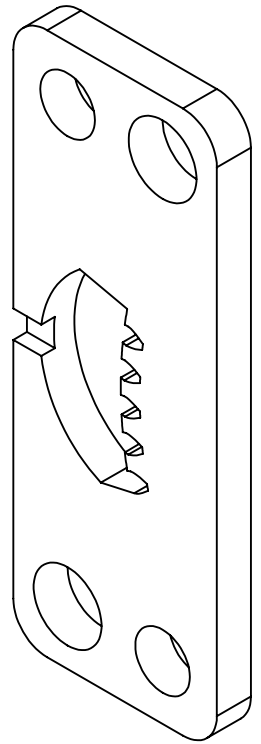

NOTES
1. ALL DASHED FEATURES WILL BE MACHINED IN THE MILL.

SolidWorks Student Edition.
For Academic Use Only.

DWG NOTES: (UNLESS OTHERWISE NOTED)
1) ALL UNITS: INCHES
2) < FILL IN NOTES HERE >

MATERIAL: Steel

TOLERANCES (UNLESS NOTED)

DECIMAL:	X.X	±0.015
	X.XX	±0.01
	X.XXX	±0.005

FRACTIONAL: ±1/32

NO. PARTS REQ'D: < # >

RENSSELAER POLYTECHNIC INSTITUTE

Mold A Outer Gear
EDM Plate

DRAWN BY: Trevor Burtzos
E-MAIL: burtzt@rpi.edu **PHONE:** 503 816 8510
FACULTY ADVISOR: Samuel Chiaponne **CHECKED: (INITIALS)**
SIZE **A** **COURSE NAME/NUMBER:** MP&S Ferris Wheel Team SECTION D
DATE: Thursday, January 31, 2013 12:24:38 AM
SCALE 2:1 CAD FILE: outergear_moving_EDM SHEET 1 OF 1

5 4 3 2 1

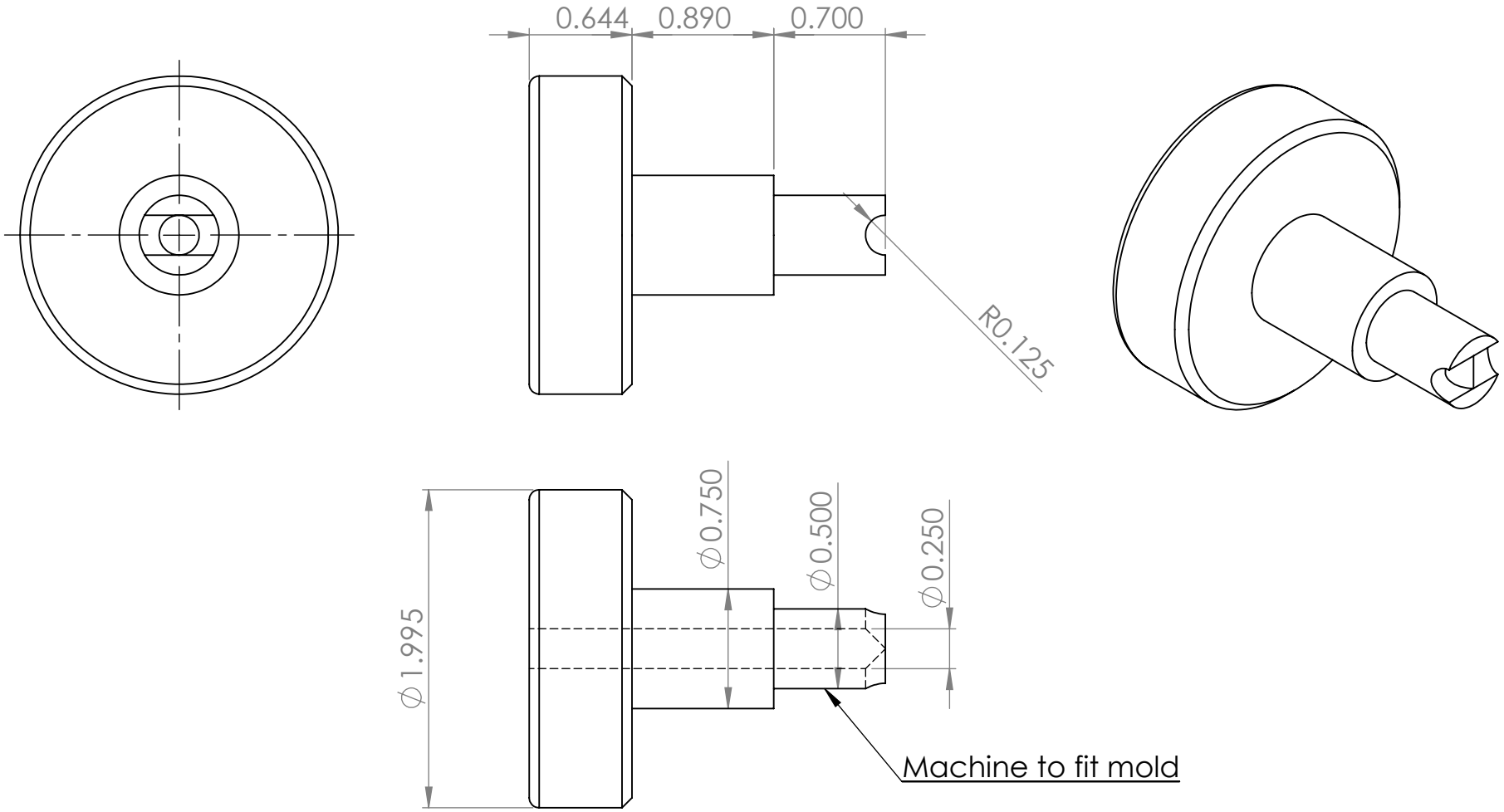

SolidWorks Student Edition.
For Academic Use Only.

DWG NOTES: (UNLESS OTHERWISE NOTED)
1) ALL UNITS: INCHES
2) < FILL IN NOTES HERE >

MATERIAL: Hardened Steel

TOLERANCES (UNLESS NOTED)

DECIMAL: X.X : ±0.015
X.XX : ±0.01
X.XXX : ±0.005

FRACTIONAL: ±1/32

NO. PARTS REQ'D: < # >

RENSSELAER POLYTECHNIC INSTITUTE

Mold A Sprue Bushing

DRAWN BY: Trevor Burtzos

E-MAIL: burtzt@rpi.edu **PHONE:** 503 816 8510

FACULTY ADVISOR: Samuel Chiaponne **CHECKED: (INITIALS)**

SIZE **A** **COURSE NAME/NUMBER:** MP&S Ferris Wheel Team SECTION D

DATE: Wednesday, March 20, 2013 9:37:33 AM

SCALE 1:1 CAD FILE: sprue_bushing SHEET 1 OF 1

5 4 3 2 1

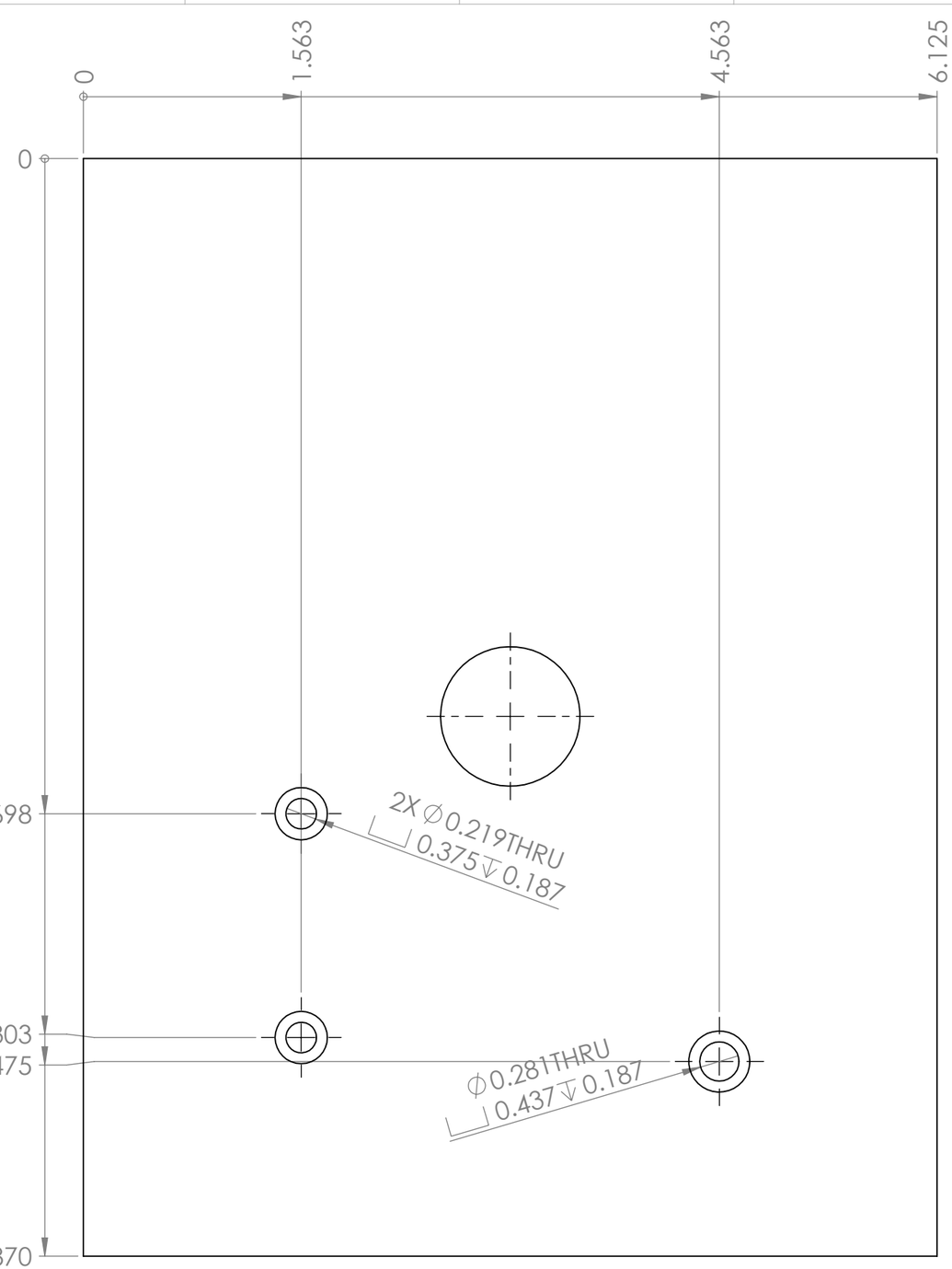

SolidWorks Student Edition.
For Academic Use Only.

DWG NOTES: (UNLESS OTHERWISE NOTED)
1) ALL UNITS: INCHES
2) < FILL IN NOTES HERE >

MATERIAL: Steel

TOLERANCES (UNLESS NOTED)

DECIMAL: X.X : ±0.015
X.XX : ±0.01
X.XXX : ±0.005

FRACTIONAL: ±1/32

NO. PARTS REQ'D: < # >

RENSSELAER POLYTECHNIC INSTITUTE

Mold B Core Pin Plate

DRAWN BY: Trevor Burtzos
E-MAIL: burtzt@rpi.edu **PHONE:** 503 816 8510
FACULTY ADVISOR: Samuel Chiaponne **CHECKED: (INITIALS)**
SIZE **B** **COURSE NAME/NUMBER:** MP&S Ferris Wheel Team SECTION D
DATE: Friday, March 01, 2013 8:57:59 AM
SCALE 1:1 CAD FILE: aml_core_pin_plate SHEET 1 OF 1

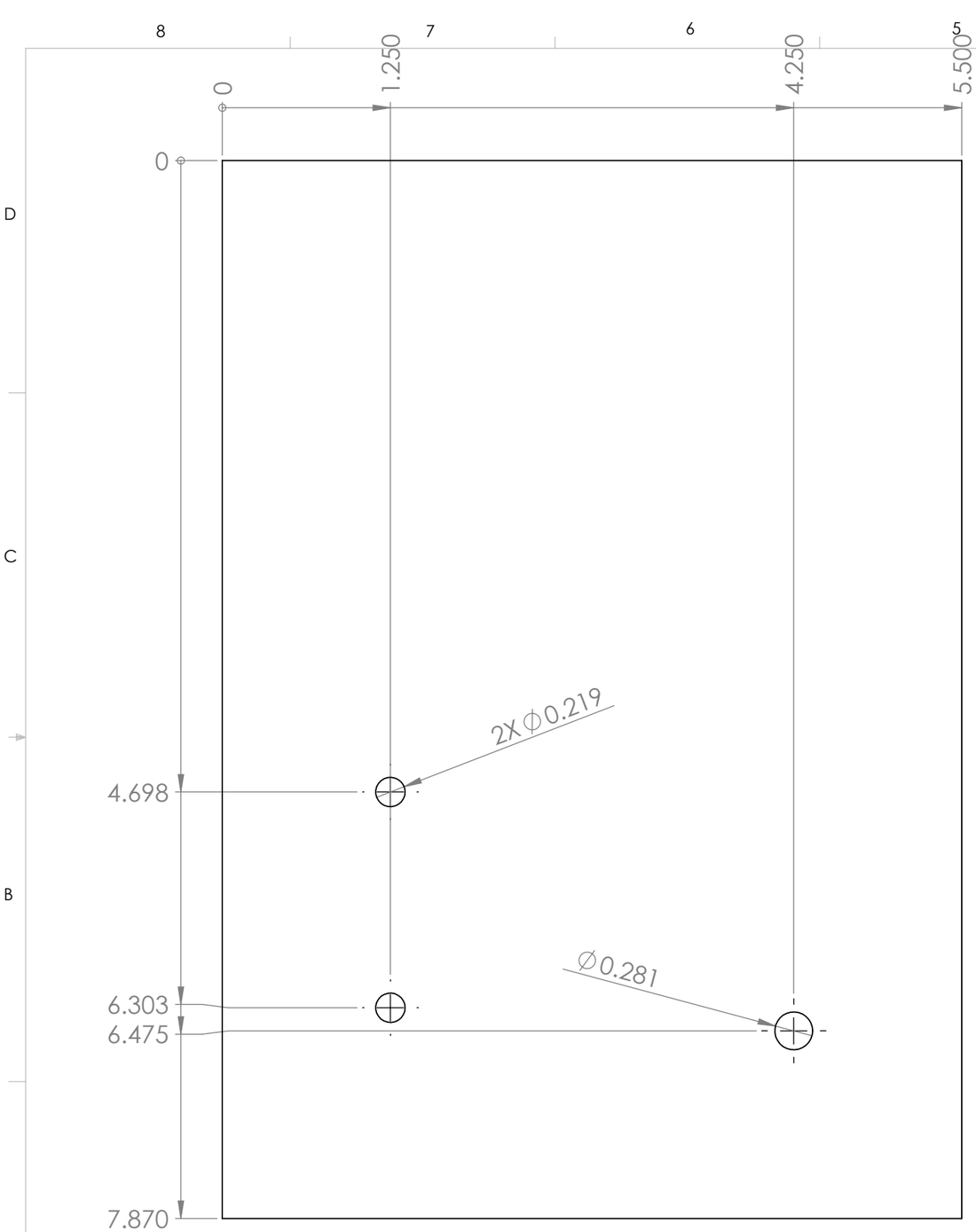

NOTE: ALL HOLES THRU

SolidWorks Student Edition.
For Academic Use Only.

DWG NOTES: (UNLESS OTHERWISE NOTED)
1) ALL UNITS: INCHES
2) < FILL IN NOTES HERE >

MATERIAL: Steel

TOLERANCES (UNLESS NOTED)

DECIMAL:	X.X	±0.015
	X.XX	±0.01
	X.XXX	±0.005
FRACTIONAL: ±1/32		

NO. PARTS REQ'D: < # >

RENSSELAER POLYTECHNIC INSTITUTE

Mold B Ejector Plate

DRAWN BY: Trevor Burtzos
E-MAIL: burtzt@rpi.edu **PHONE:** 503 816 8510
FACULTY ADVISOR: Samuel Chiaponne **CHECKED: (INITIALS)**
SIZE **B** **COURSE NAME/NUMBER:** MP&S Ferris Wheel Team SECTION D
DATE: Friday, March 01, 2013 8:52:05 AM
SCALE 1:1 CAD FILE: aml_ejector_plate SHEET 1 OF 1

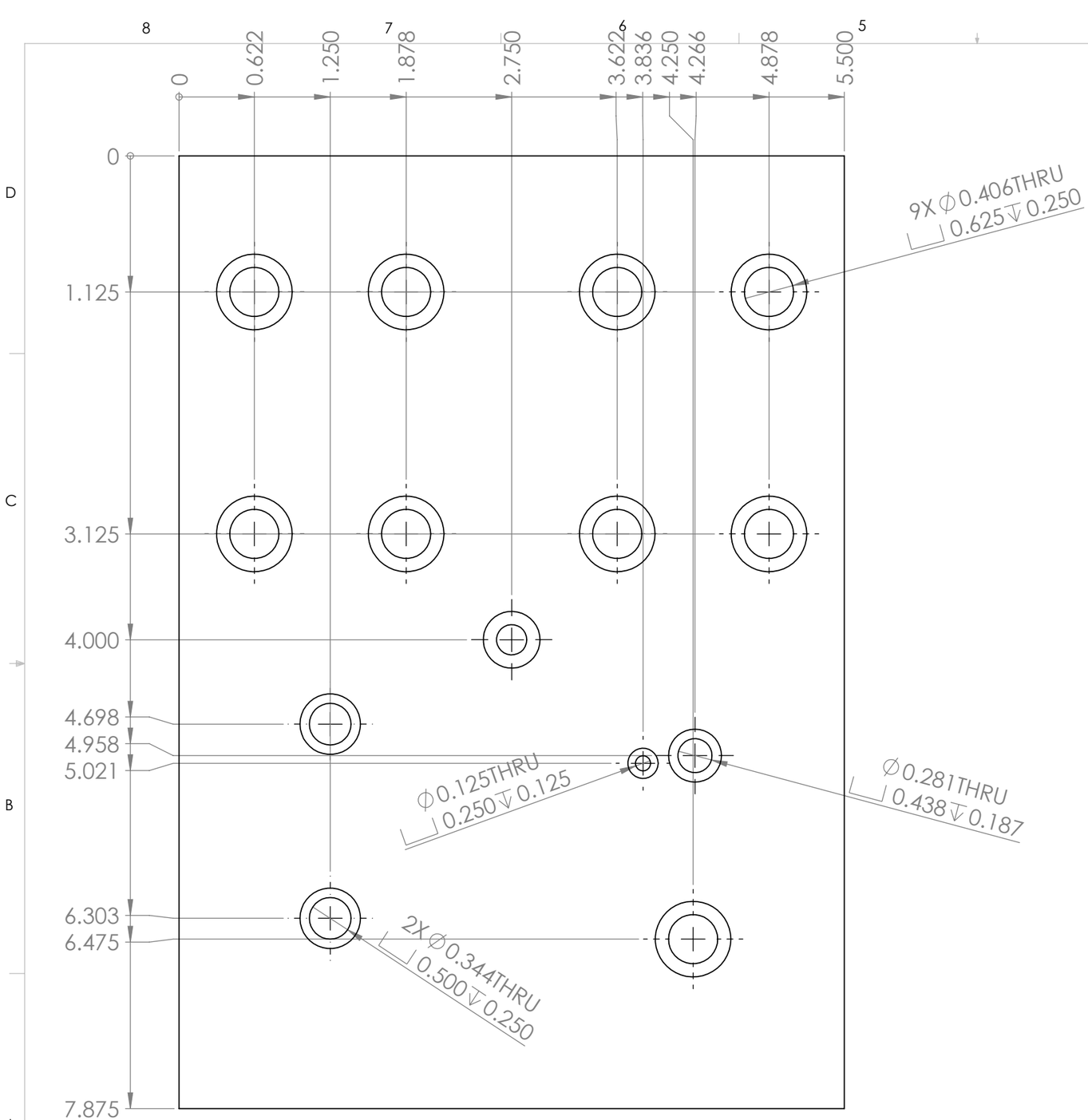

SolidWorks Student Edition.
For Academic Use Only.

DWG NOTES: (UNLESS OTHERWISE NOTED)
1) ALL UNITS: INCHES
2) < FILL IN NOTES HERE >

MATERIAL: Steel

TOLERANCES (UNLESS NOTED)

DECIMAL: X.X : ±0.015
X.XX : ±0.01
X.XXX : ±0.005

FRACTIONAL: ±1/32

NO. PARTS REQ'D: < # >

RENSSELAER POLYTECHNIC INSTITUTE

Mold B Ejector Retainer Plate

DRAWN BY: Trevor Burtzos
E-MAIL: burtzt@rpi.edu **PHONE:** 503 816 8510
FACULTY ADVISOR: Samuel Chiaponne **CHECKED: (INITIALS)**
SIZE B | **COURSE NAME/NUMBER:** MP&S Ferris Wheel Team | SECTION D
DATE: Friday, March 01, 2013 8:45:00 AM
SCALE 1:1 | CAD FILE: aml_ejector_retainer_plate | SHEET 1 OF 1

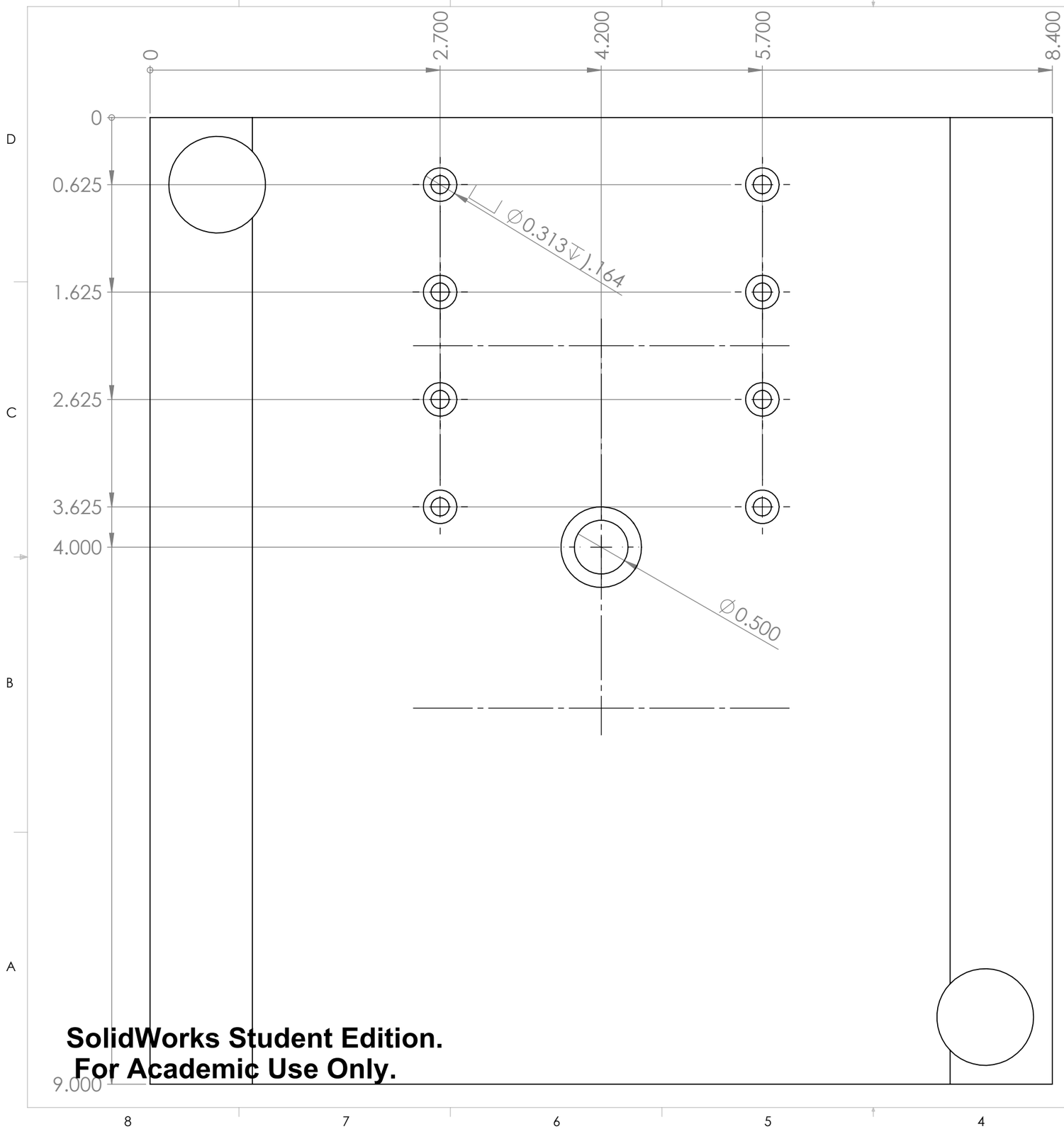

SolidWorks Student Edition.
For Academic Use Only.

UNLESS OTHERWISE SPECIFIED:		NAME	DATE
DIMENSIONS ARE IN INCHES TOLERANCES: FRACTIONAL ± ANGULAR: MACH ± BEND ± TWO PLACE DECIMAL ± THREE PLACE DECIMAL ±	DRAWN	TB	3/2/13
	CHECKED		
	ENG APPR.		
	MFG APPR.		
INTERPRET GEOMETRIC TOLERANCING PER:	Q.A.		
MATERIAL: Material <not specified>	COMMENTS:		
FINISH			
DO NOT SCALE DRAWING			

TITLE:
Mold B Stationary Drill Plan

SIZE	DWG. NO.	REV
B	aml_stationary_plate_no_square_cbore	1
SCALE: 1:1	WEIGHT:	SHEET 1 OF 1

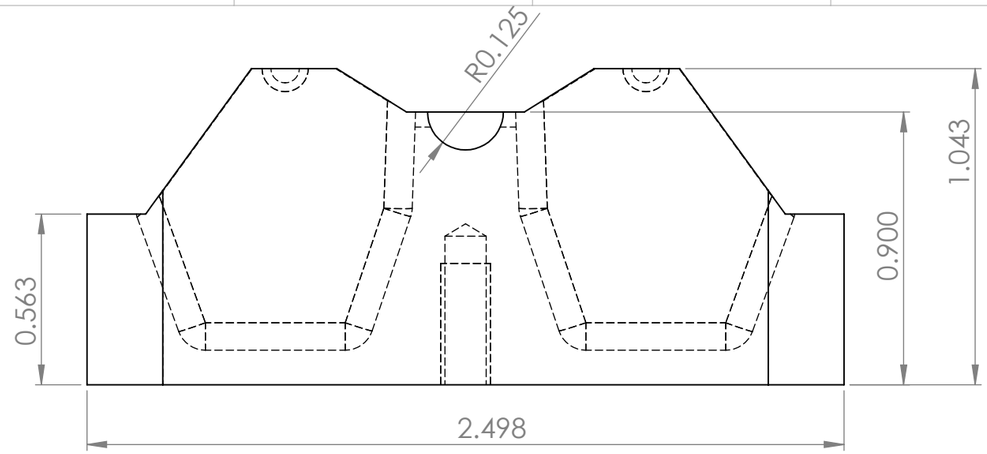

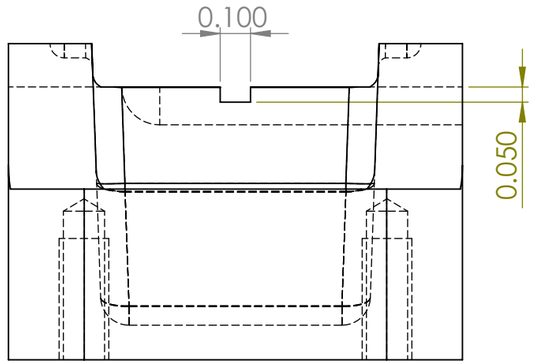

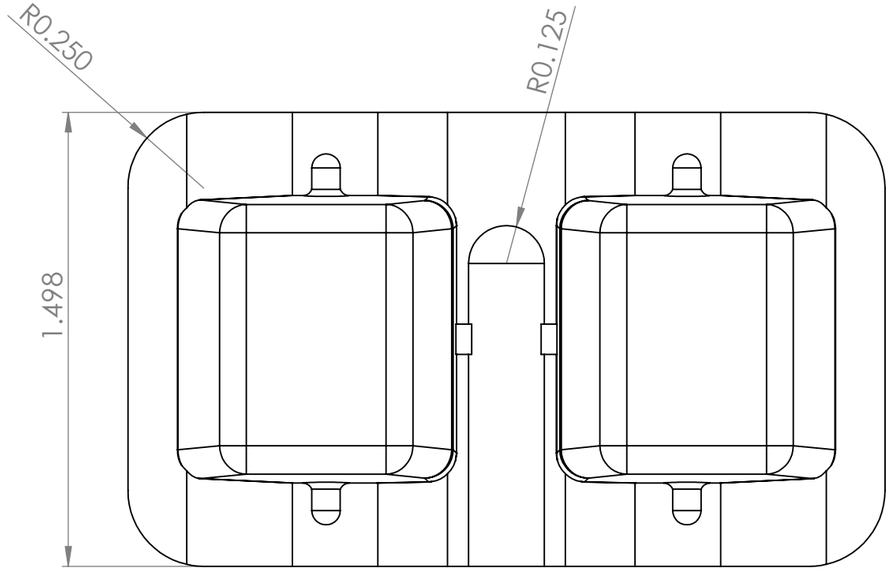

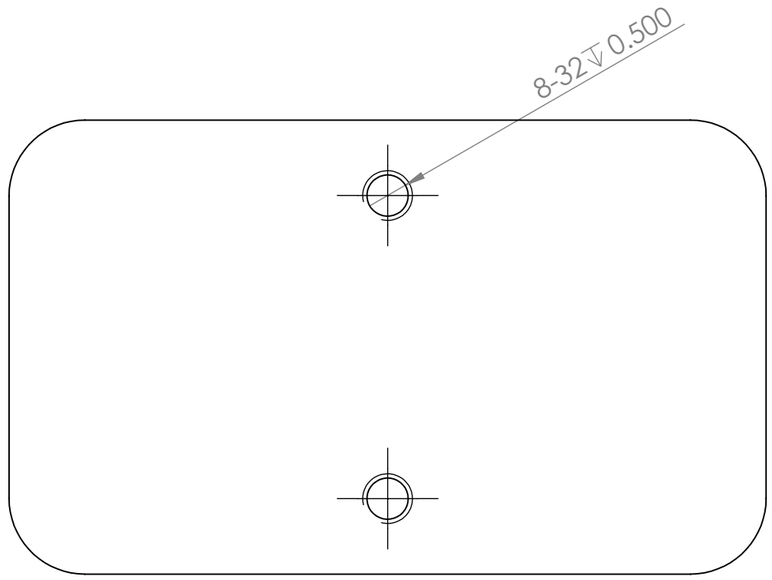

SolidWorks Student Edition.
For Academic Use Only.

DWG NOTES: (UNLESS OTHERWISE NOTED)
1) ALL UNITS: INCHES
2) < FILL IN NOTES HERE >

MATERIAL: Aluminum

TOLERANCES (UNLESS NOTED)

DECIMAL: X.X : ±0.015
X.XX : ±0.01
X.XXX : ±0.005

FRACTIONAL: ±1/32

NO. PARTS REQ'D: < # >

RENSSELAER POLYTECHNIC INSTITUTE

Mold B Cart Insert
Female

DRAWN BY: < INSERT NAME HERE >

E-MAIL: < E-MAIL ADDRESS HERE> **PHONE:** <PHONE NUM. HERE>

FACULTY ADVISOR: Samuel Chiaponne **CHECKED: (INITIALS)**

SIZE **B** | **COURSE NAME/NUMBER:** MP&S Ferris Wheel Team | SECTION D
DATE: Wednesday, February 20, 2013 1:16:41 AM

SCALE 2:1 | CAD FILE: cart_insert_female | SHEET 1 OF 1

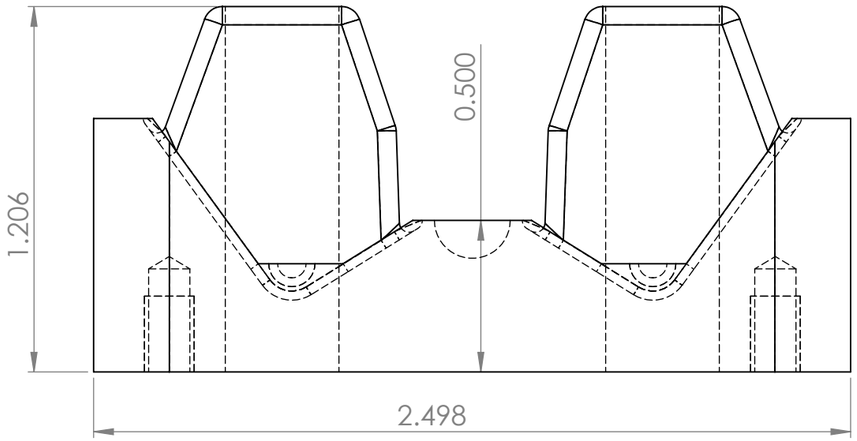

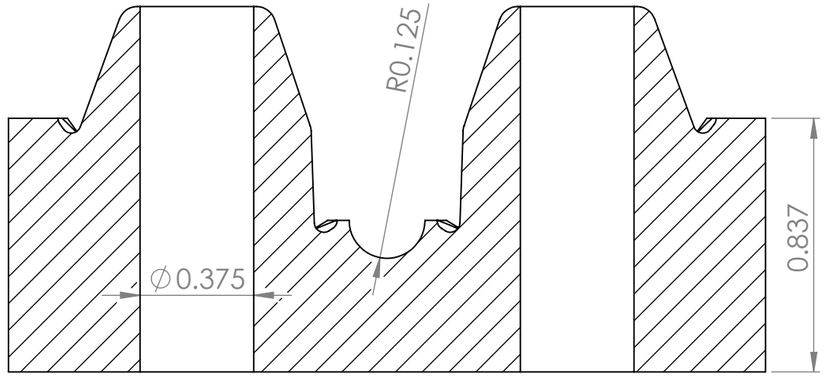

SECTION A-A
SCALE 2 : 1

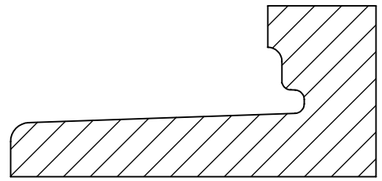

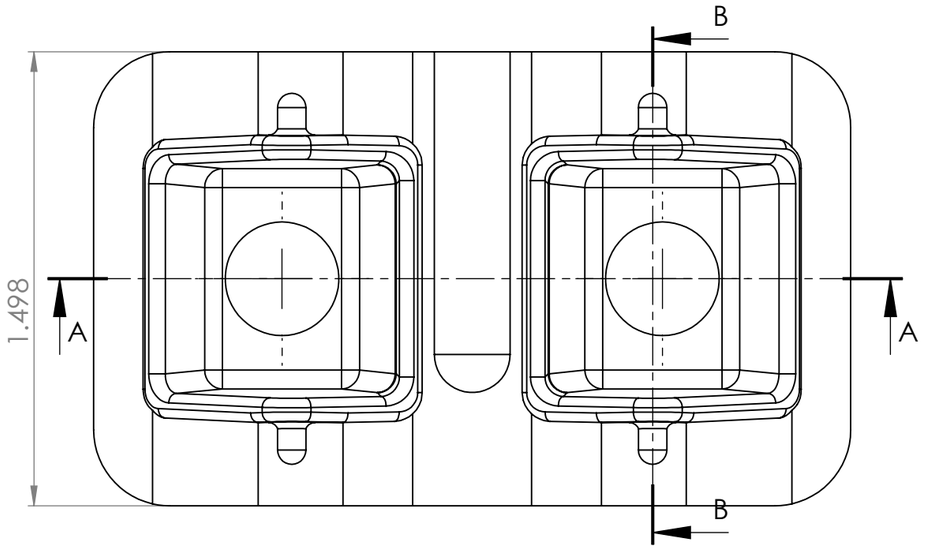

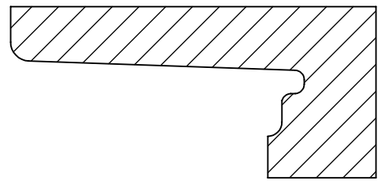

SECTION B-B
SCALE 2 : 1

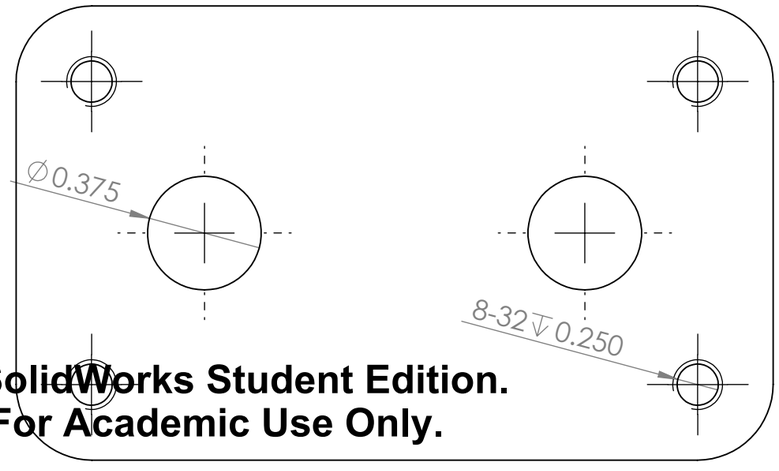

SolidWorks Student Edition.
For Academic Use Only.

DWG NOTES: (UNLESS OTHERWISE NOTED)
1) ALL UNITS: INCHES
2) < FILL IN NOTES HERE >

MATERIAL: Aluminum

TOLERANCES (UNLESS NOTED)

DECIMAL: X.X : ±0.015
X.XX : ±0.01
X.XXX : ±0.005

FRACTIONAL: ±1/32

NO. PARTS REQ'D: < # >

RENSSELAER POLYTECHNIC INSTITUTE

Mold B Cart Insert Male

DRAWN BY: Trevor Burtzos
E-MAIL: burtzt@rpi.edu **PHONE:** 503 816 8510
FACULTY ADVISOR: Samuel Chiaponne **CHECKED: (INITIALS)**
SIZE **B** **COURSE NAME/NUMBER:** MP&S Ferris Wheel Team SECTION D
DATE: Wednesday, February 20, 2013 1:07:14 AM
SCALE 2:1 CAD FILE: cart_insert_male SHEET 1 OF 1

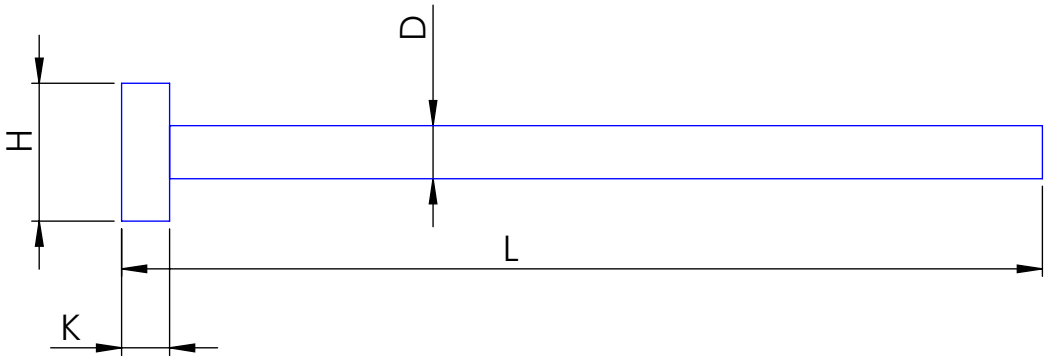

NOTES
1. See table for dimesions
2. All lengths L critical

Quantity	D	L	H	K
8	3/8	4.8008	.625	.25
1	1/4	4.8150	.437	.187
1	1/4	3.9925	.437	.187
2	3/16	4.7188	.375	.187
1	1/16	3.8563	.25	.125

SolidWorks Student Edition.
For Academic Use Only.

DWG NOTES: (UNLESS OTHERWISE NOTED)
1) ALL UNITS: INCHES
2) < FILL IN NOTES HERE >

MATERIAL: Case Hardened Steel

TOLERANCES (UNLESS NOTED)
DECIMAL: X.X : ±0.015, X.XX : ±0.01, X.XXX : ±0.005
FRACTIONAL: ±1/32
NO. PARTS REQ'D: < # >

RENSSELAER POLYTECHNIC INSTITUTE

Mold B Ejector Pins

DRAWN BY: Trevor Burtzos
E-MAIL: burtzt@rpi.edu **PHONE:** 503 816 8510
FACULTY ADVISOR: Samuel Chiaponne **CHECKED: (INITIALS)**
SIZE A | **COURSE NAME/NUMBER:** MP&S Ferris Wheel Team | SECTION D
DATE: Tuesday, February 12, 2013 1:36:36 AM
SCALE 1:1 | CAD FILE: ejector_b | SHEET 1 OF 1

5 4 3 2 1

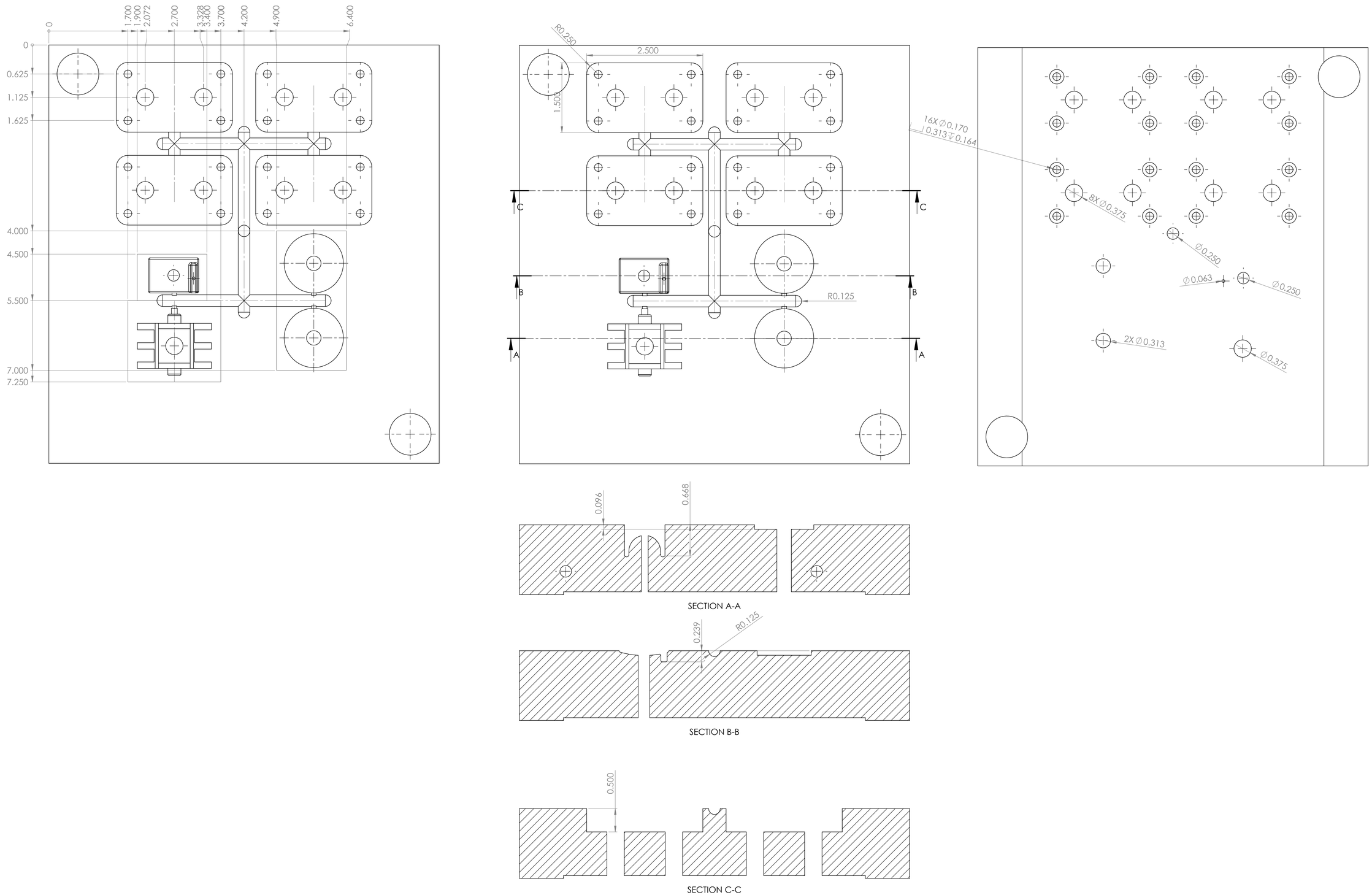

SolidWorks Student Edition.
For Academic Use Only.

DWG NOTES: (UNLESS OTHERWISE NOTED)
1) ALL UNITS: INCHES
2) < FILL IN NOTES HERE >

MATERIAL: Aluminum

TOLERANCES (UNLESS NOTED)
DECIMAL: X.X : ±0.015
X.XX : ±0.01
X.XXX : ±0.005
FRACTIONAL: ±1/32
NO. PARTS REQ'D: < # >

RENSSELAER POLYTECHNIC INSTITUTE

Mold B Moving Plate

DRAWN BY: Trevor Burtzos
E-MAIL: burtzt@rpi.edu **PHONE:** 503 816 8510
FACULTY ADVISOR: Samuel Chiaponne **CHECKED: (INITIALS)**
SIZE D **COURSE NAME/NUMBER:** MP&S Ferris Wheel Team **SECTION** D
DATE: Wednesday, February 20, 2013 12:34:32 AM
SCALE 1:1 CAD FILE: 12Condvk_Mold800_000_01126 SHEET 1 OF 1

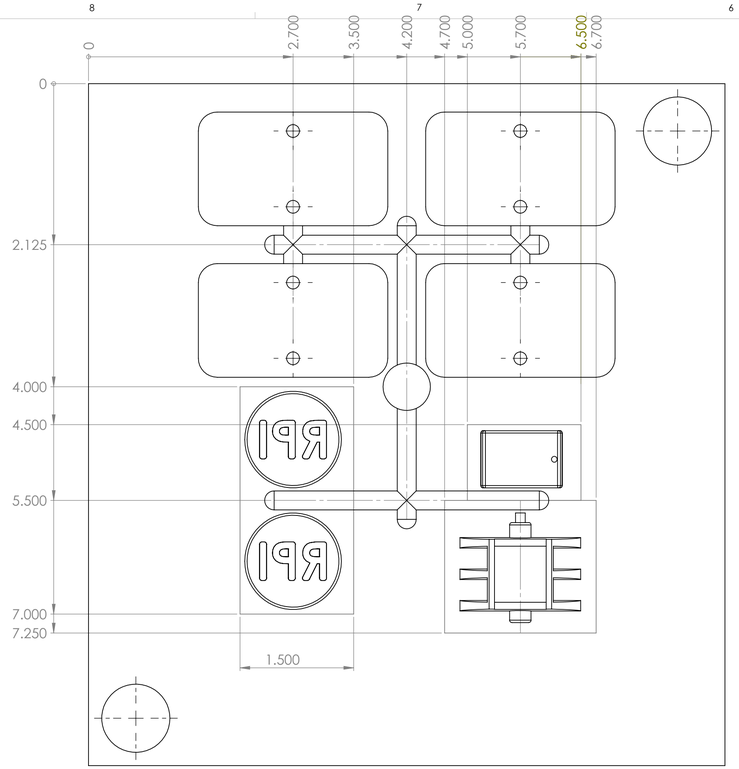

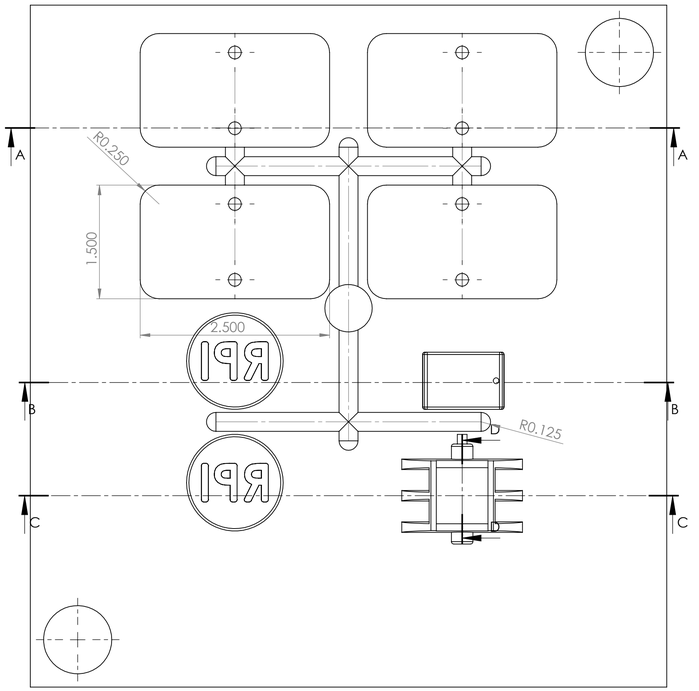

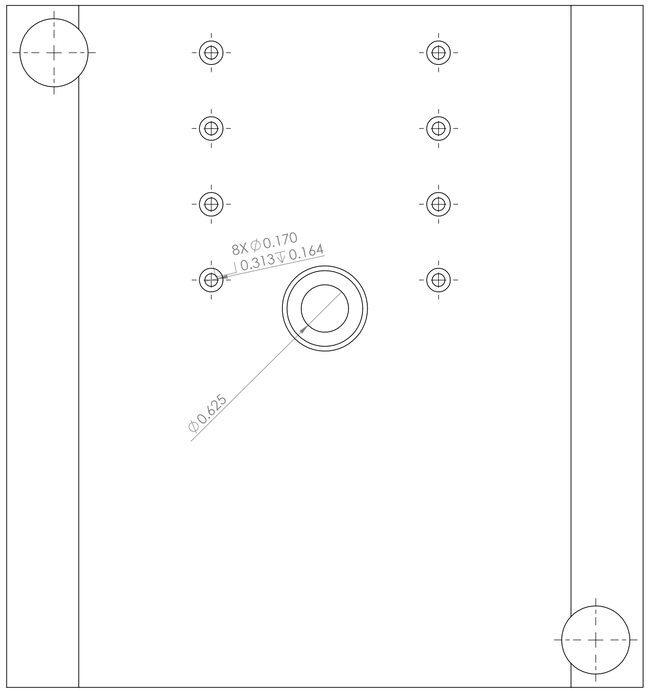

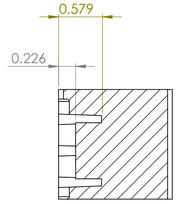

SECTION D-D

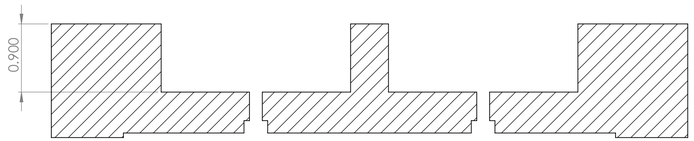

SECTION A-A

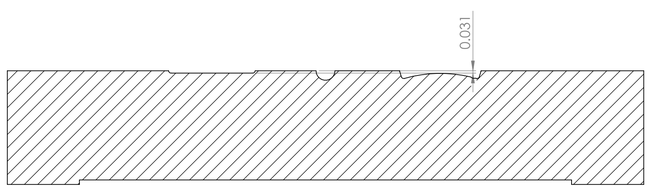

SECTION B-B

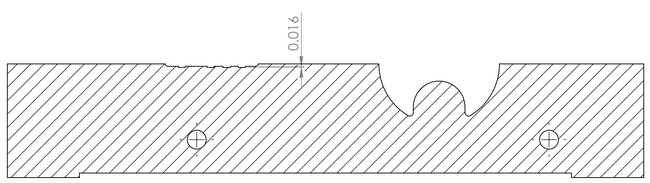

SECTION C-C

SolidWorks Student Edition.
For Academic Use Only.

DWG NOTES: (UNLESS OTHERWISE NOTED)
1) ALL UNITS: INCHES
2) < FILL IN NOTES HERE >

MATERIAL: Aluminum

TOLERANCES (UNLESS NOTED)
DECIMAL: X.X : ±0.015
X.XX : ±0.01
X.XXX : ±0.005
FRACTIONAL: ±1/32
NO. PARTS REQ'D: < # >

RENSSELAER POLYTECHNIC INSTITUTE

Mold B Stationary Plate

DRAWN BY: Trevor Burtzos
E-MAIL: burtzt@rpi.edu **PHONE:** 503 816 8510
FACULTY ADVISOR: Samuel Chiaponne **CHECKED: (INITIALS)**

SIZE D | **COURSE NAME/NUMBER:** MP&S Ferris Wheel Team | SECTION: D
DATE: Tuesday, February 19, 2013 11:34:07 PM
SCALE 1:1 | CAD FILE: 12Gondola_Mold&Die\01_D\02b_ | SHEET 1 OF 1

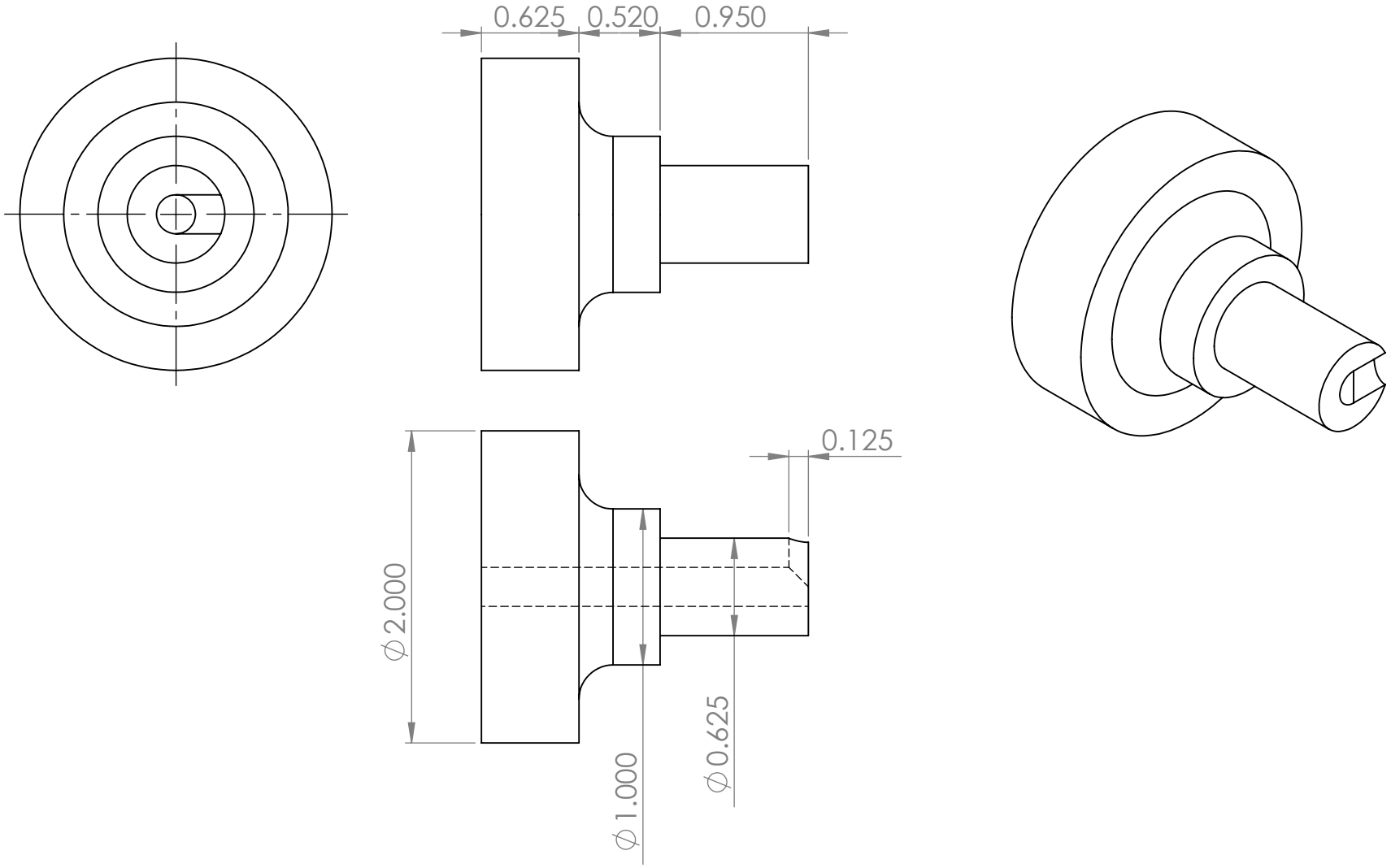

SolidWorks Student Edition.
For Academic Use Only.

DWG NOTES: (UNLESS OTHERWISE NOTED)
1) ALL UNITS: INCHES
2) < FILL IN NOTES HERE >

MATERIAL: Hardened Steel

TOLERANCES (UNLESS NOTED)

DECIMAL: X.X : ±0.015
X.XX : ±0.01
X.XXX : ±0.005

FRACTIONAL: ±1/32

NO. PARTS REQ'D: < # >

RENSSELAER POLYTECHNIC INSTITUTE

Mold B Sprue Bushing

DRAWN BY: Trevor Burtzos

E-MAIL: burtzt@rpi.edu **PHONE:** 503 816 8510

FACULTY ADVISOR: Samuel Chiaponne **CHECKED: (INITIALS)**

SIZE **A** | **COURSE NAME/NUMBER:** MP&S Ferris Wheel Team | SECTION D

DATE: Friday, March 22, 2013 9:20:20 AM

SCALE 1:1 | CAD FILE: sprue_bushing_b | SHEET 1 OF 1

5 4 3 2 1

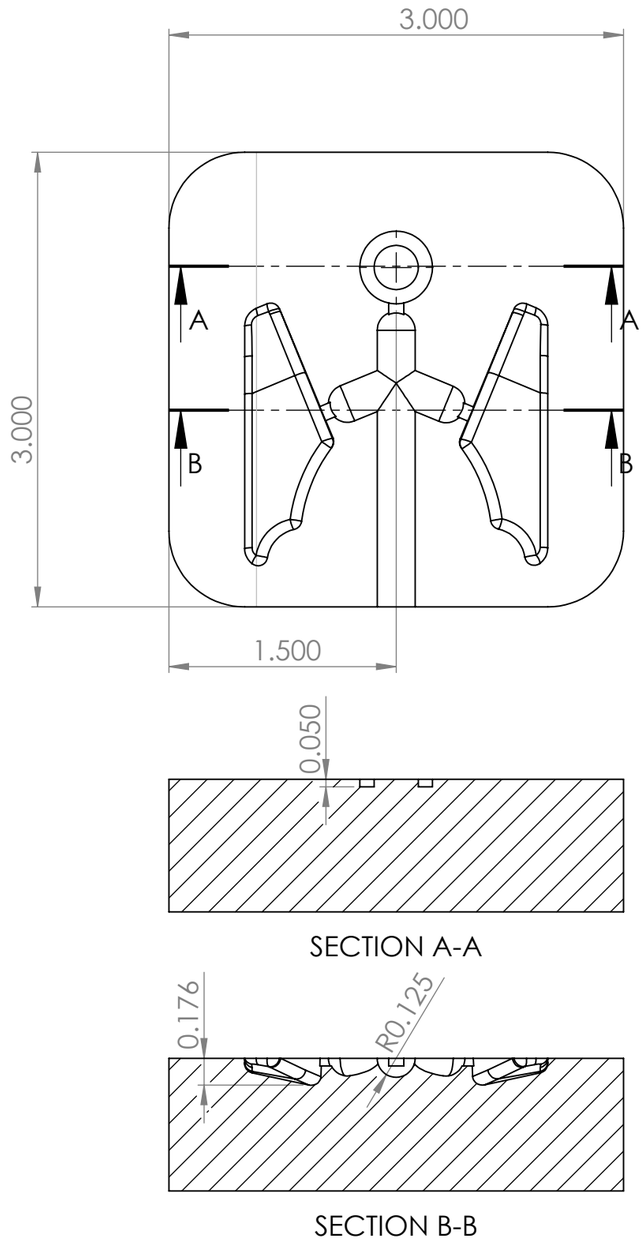

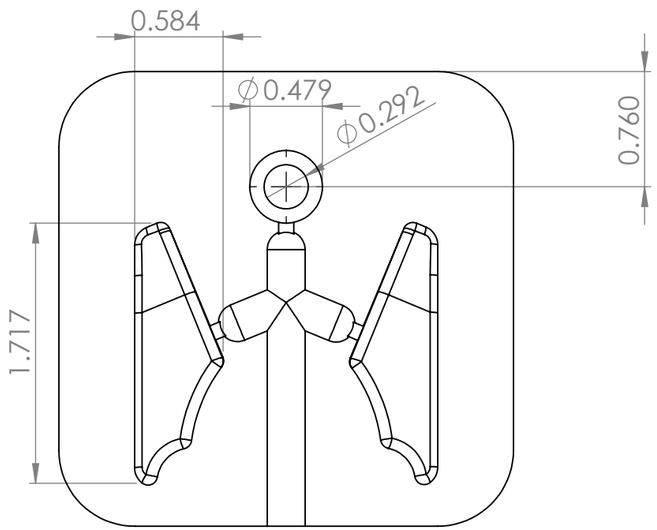

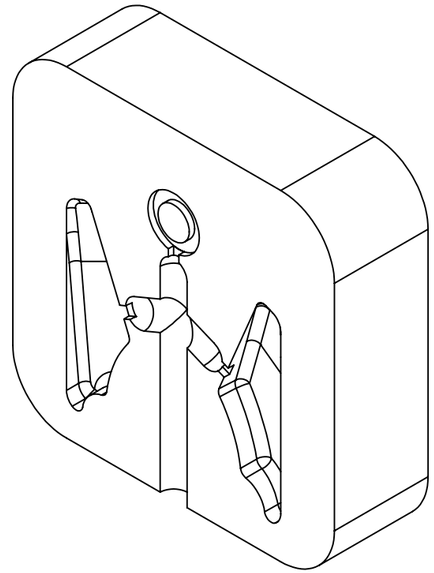

SECTION A-A

SECTION B-B

SolidWorks Student Edition.
For Academic Use Only.

DWG NOTES: (UNLESS OTHERWISE NOTED)
1) ALL UNITS: INCHES
2) < FILL IN NOTES HERE >

MATERIAL: 6061-T6 ALUMINUM

TOLERANCES (UNLESS NOTED)

DECIMAL: X.X : ±0.015
X.XX : ±0.01
X.XXX : ±0.005

FRACTIONAL: ±1/32

NO. PARTS REQ'D: 1

RENSSELAER POLYTECHNIC INSTITUTE

MINI MOLD

DRAWN BY: Trevor Burtzos
E-MAIL: burtzt@rpi.edu **PHONE:** (503)816-8510
FACULTY ADVISOR: Samuel Chiaponne **CHECKED: (INITIALS)**
SIZE **B** **COURSE NAME/NUMBER:** MP&S Ferris Wheel Team SECTION D
DATE: Monday, April 15, 2013 3:27:28 PM
SCALE 1:1 CAD FILE: mini_mold SHEET 1 OF 1

Assembly
CAD Drawings

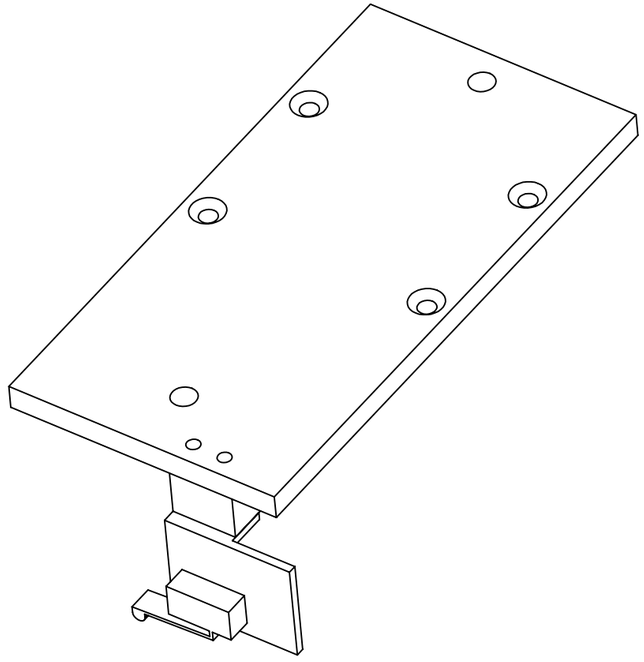

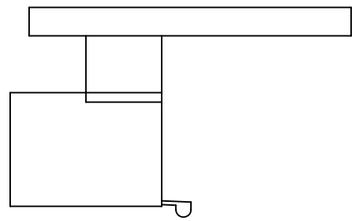

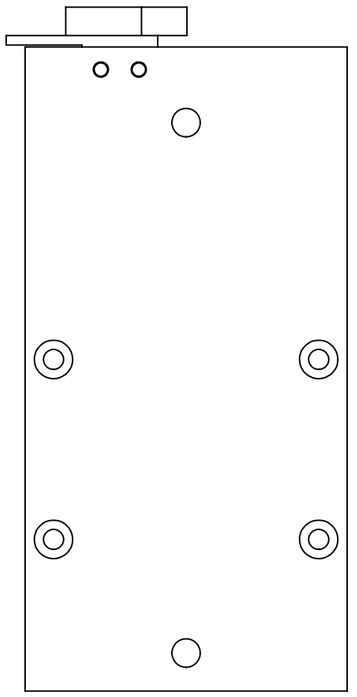

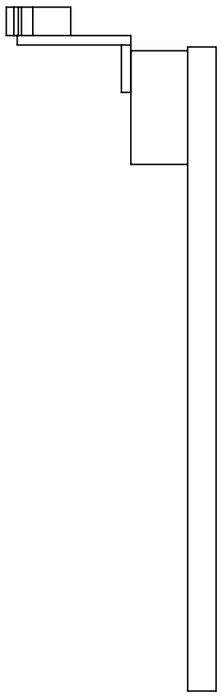

DWG NOTES: (UNLESS OTHERWISE NOTED)

1) ALL UNITS: INCHES

MATERIAL: Aluminium

TOLERANCES (UNLESS NOTED)

DECIMAL: X.X : ±0.015
X.XX : ±0.01
X.XXX : ±0.005

FRACTIONAL: ±1/32

NO. PARTS REQ'D: 1

RENSSELAER POLYTECHNIC INSTITUTE

Wheel Fixture Adapter Plate

DRAWN BY: Daniel Golding/Wesley Koo

E-MAIL: koow@rpi.edu **PHONE:** 650-804-4515

FACULTY ADVISOR: Samuel Chiappone **CHECKED: (INITIALS)**

SIZE **B** **COURSE NAME/NUMBER:** MP&S A Team SECTION A

DATE: Wednesday, May 01, 2013 9:41:32 AM

SCALE 1:2 CAD FILE: 12CandyA_AdapterPlate1160_AF1160_010430 SHEET 1 OF 4

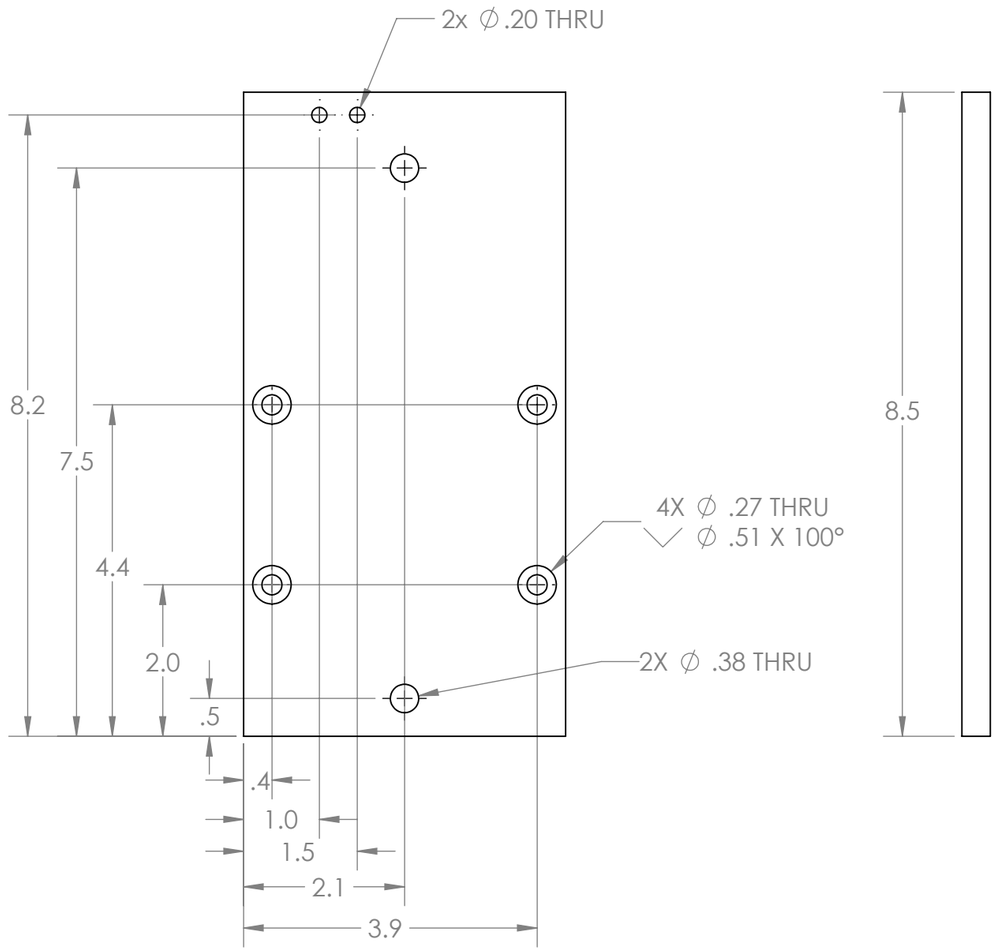

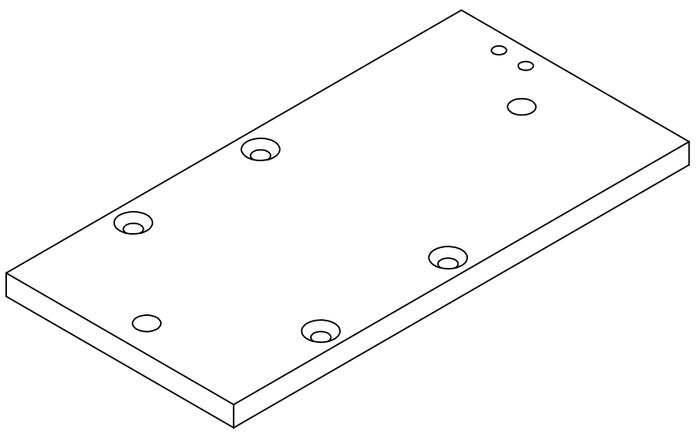

DWG NOTES: (UNLESS OTHERWISE NOTED)

1) ALL UNITS: INCHES
2) The 4 counter sunk holes should line up with the pneumatic track

MATERIAL: Aluminium

TOLERANCES (UNLESS NOTED)

DECIMAL: X.X : ±0.015, X.XX : ±0.01, X.XXX : ±0.005

FRACTIONAL: ±1/32

NO. PARTS REQ'D: 1

RENSSELAER POLYTECHNIC INSTITUTE

Wheel Fixture Adapter Plate Plate

DRAWN BY: Daniel Golding/Wesley Koo

E-MAIL: koow@rpi.edu **PHONE:** 650-804-4515

FACULTY ADVISOR: Samuel Chiappone **CHECKED: (INITIALS)**

SIZE **B** | **COURSE NAME/NUMBER:** MP&S A Team | SECTION A

DATE: Wednesday, May 01, 2013 9:41:32 AM

SCALE 1:2 | CAD FILE: 12CandyA_AdapterPlatePlate1161_AF1161_010430 | SHEET 2 OF 4

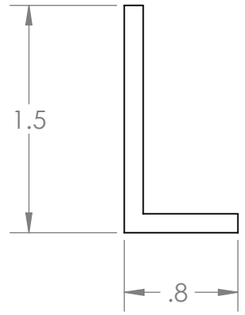

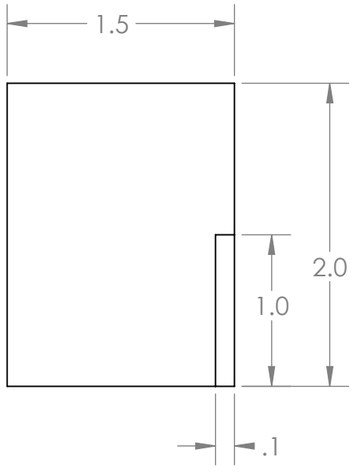

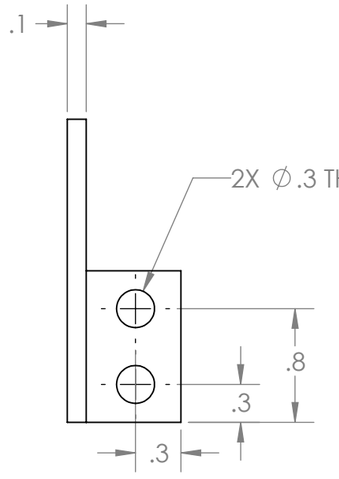

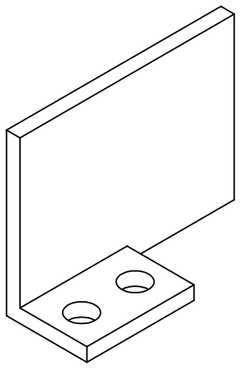

DWG NOTES: (UNLESS OTHERWISE NOTED)
1) ALL UNITS: INCHES
2) Holes should match with plate

MATERIAL: Aluminium

TOLERANCES (UNLESS NOTED)

DECIMAL: X.X : ±0.015
X.XX : ±0.01
X.XXX : ±0.005

FRACTIONAL: ±1/32

NO. PARTS REQ'D: 1

RENSSELAER POLYTECHNIC INSTITUTE

Wheel Fixture Adapter Plate L Bracket

DRAWN BY: Daniel Golding/Wesley Koo

E-MAIL: koow@rpi.edu **PHONE:** 650-804-4515

FACULTY ADVISOR: Samuel Chiappone **CHECKED: (INITIALS)**

SIZE **B** | **COURSE NAME/NUMBER:** MP&S A Team | SECTION A

DATE: Wednesday, May 01, 2013 9:41:32 AM

SCALE 1:1 | CAD FILE: 12CandyA_AdapterPlateL1162_AF1162_010400 | SHEET 3 OF 4

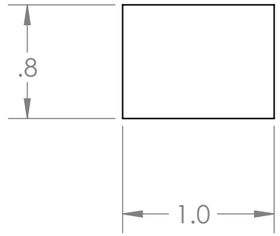

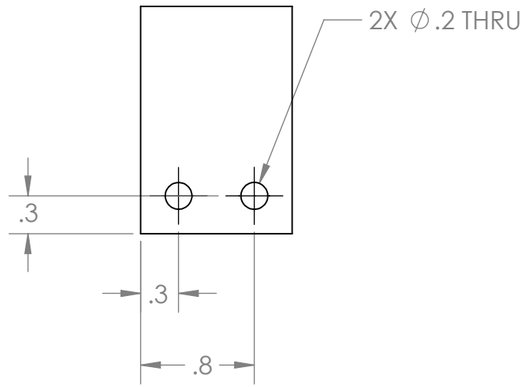

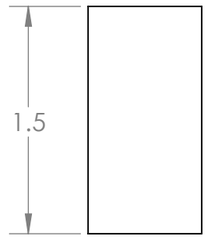

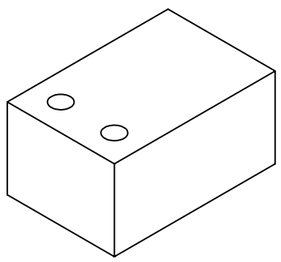

DWG NOTES: (UNLESS OTHERWISE NOTED)
1) ALL UNITS: INCHES
2) Holes should line up with L bracket and plate

MATERIAL: Aluminium

TOLERANCES (UNLESS NOTED)

DECIMAL: X.X : ±0.015
X.XX : ±0.01
X.XXX : ±0.005

FRACTIONAL: ±1/32

NO. PARTS REQ'D: 1

RENSSELAER POLYTECHNIC INSTITUTE

Wheel Fixture Adapter Plate Sensor Spacer

DRAWN BY: Daniel Golding/Wesley Koo

E-MAIL: koow@rpi.edu **PHONE:** 650-804-4515

FACULTY ADVISOR: Samuel Chiappone **CHECKED: (INITIALS)**

SIZE **B** | **COURSE NAME/NUMBER:** MP&S A Team | SECTION A

DATE: Wednesday, May 01, 2013 9:41:32 AM

SCALE 1:1 | CAD FILE: 12CandyA_AdapterPlateSensorSpacer1163_AF1163_01040 | SHEET 4 OF 4

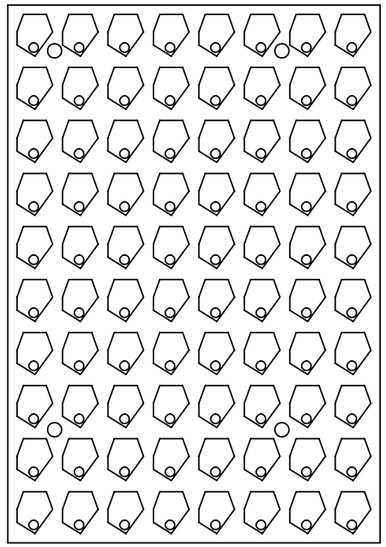

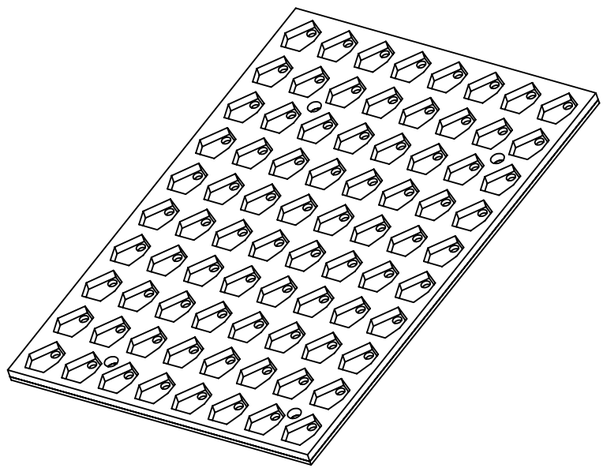

DWG NOTES: (UNLESS OTHERWISE NOTED)
1) ALL UNITS: INCHES
2) Cut on waterjet

MATERIAL: ABS

TOLERANCES (UNLESS NOTED)

DECIMAL: X.X : ±0.015, X.XX : ±0.01, X.XXX : ±0.005

FRACTIONAL: ±1/32

NO. PARTS REQ'D: 1

RENSSELAER POLYTECHNIC INSTITUTE

Cart Pallet

DRAWN BY: Daniel Golding/Wesley Koo

E-MAIL: koow@rpi.edu **PHONE:** 650-804-4515

FACULTY ADVISOR: Samuel Chiappone **CHECKED: (INITIALS)**

SIZE **B** | **COURSE NAME/NUMBER:** MP&S A Team | SECTION A

DATE: Wednesday, May 01, 2013 10:37:35 AM

SCALE 1:4 | CAD FILE: 12CandyA_CartPL1090_AF1090_020326 | SHEET 1 OF 3

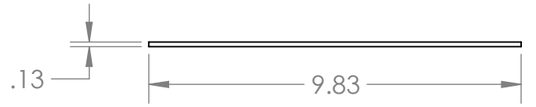

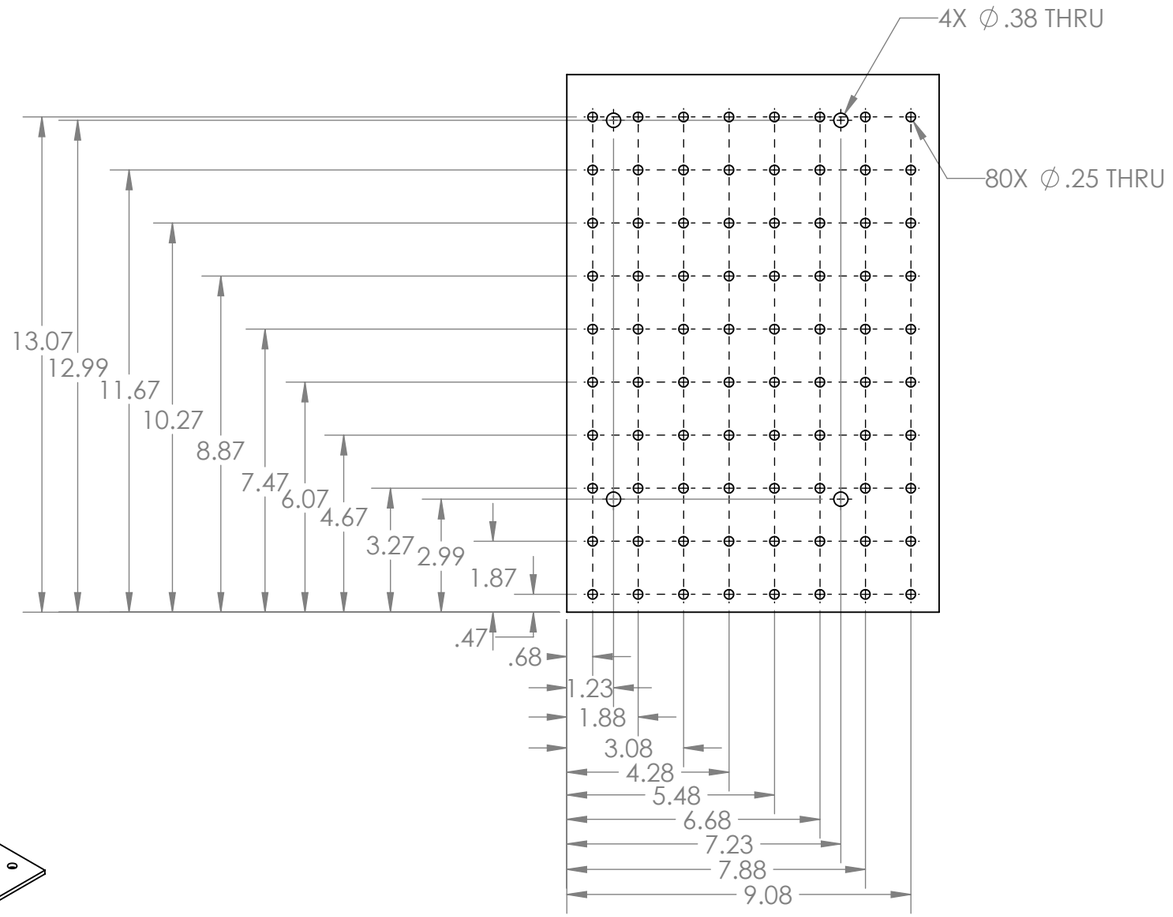

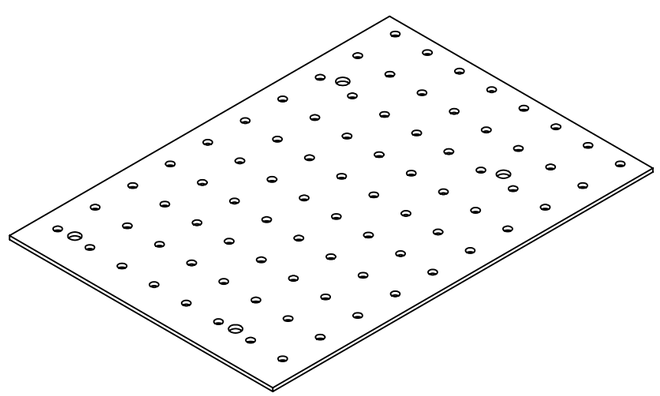

DWG NOTES: (UNLESS OTHERWISE NOTED)
1) ALL UNITS: INCHES
2) Cut on waterjet

MATERIAL: ABS

TOLERANCES (UNLESS NOTED)
DECIMAL: X.X : ±0.015, X.XX : ±0.01, X.XXX : ±0.005
FRACTIONAL: ±1/32

NO. PARTS REQ'D: 1

RENSSELAER POLYTECHNIC INSTITUTE

Cart Pallet Bottom

DRAWN BY: Daniel Golding/Wesley Koo
E-MAIL: koow@rpi.edu **PHONE:** 650-804-4515
FACULTY ADVISOR: Samuel Chiappone **CHECKED: (INITIALS)**
SIZE **B** **COURSE NAME/NUMBER:** MP&S A Team SECTION A
DATE: Wednesday, May 01, 2013 10:37:35 AM
SCALE 1:4 CAD FILE: I:2Candy\A_Cart\PL\Bottom1092_AF1092_020326 SHEET 2 OF 3

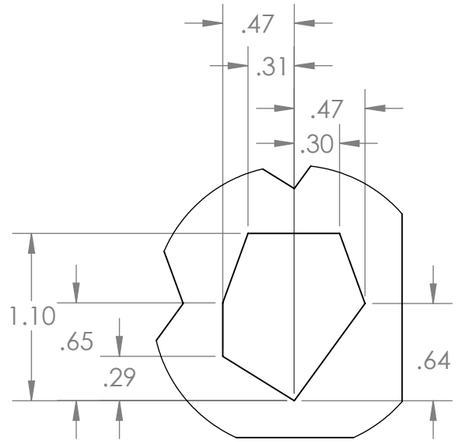

DETAIL A
SCALE 1 : 1

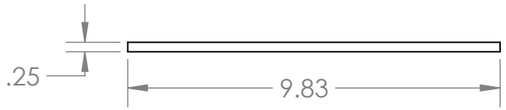

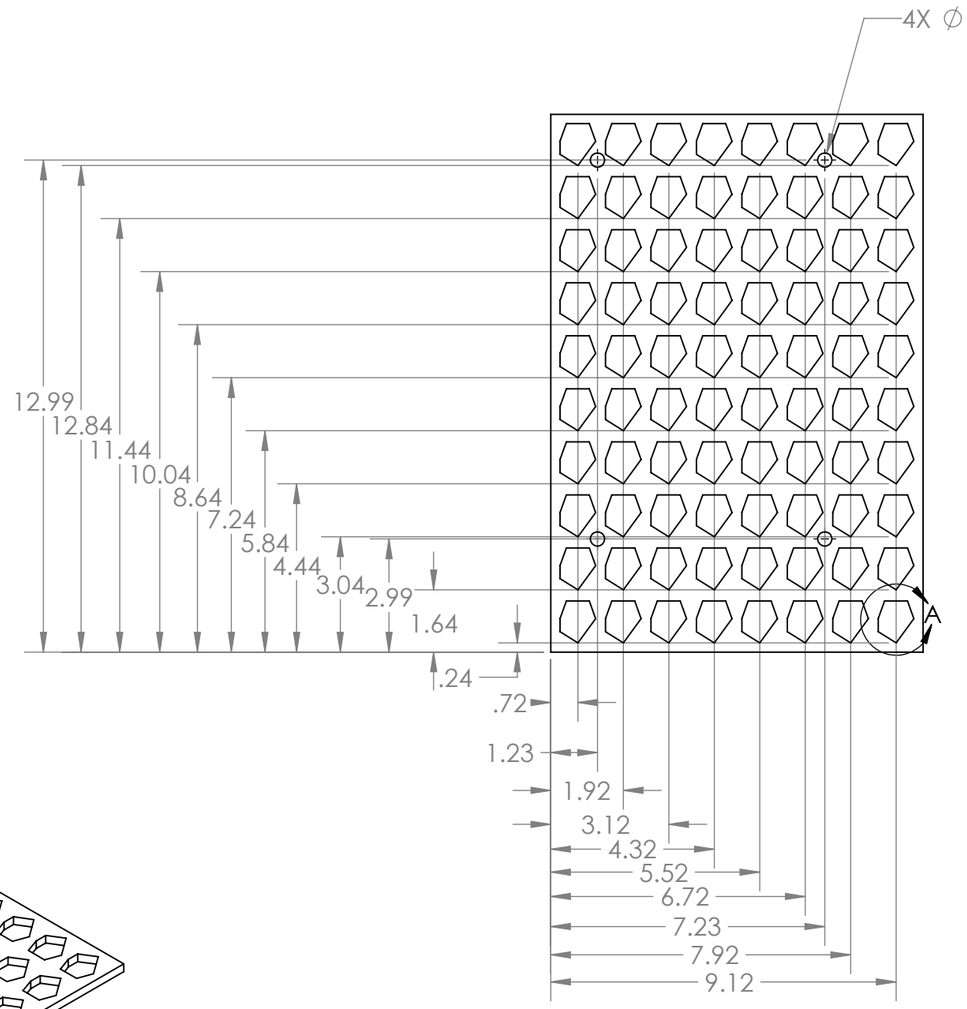

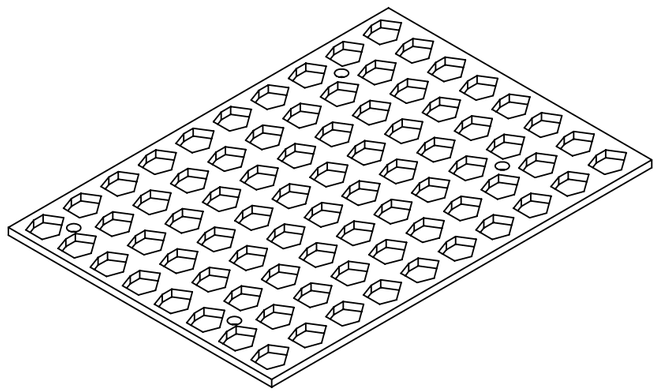

DWG NOTES: (UNLESS OTHERWISE NOTED)
1) ALL UNITS: INCHES
2) Cut on waterjet

MATERIAL: ABS

TOLERANCES (UNLESS NOTED)

DECIMAL: X.X : ±0.015
X.XX : ±0.01
X.XXX : ±0.005

FRACTIONAL: ±1/32

NO. PARTS REQ'D: 1

RENSSELAER POLYTECHNIC INSTITUTE

Cart Pallet Top

DRAWN BY: Daniel Golding/Wesley Koo

E-MAIL: koow@rpi.edu **PHONE:** 650-804-4515

FACULTY ADVISOR: Samuel Chiappone **CHECKED: (INITIALS)**

SIZE **B** | **COURSE NAME/NUMBER:** MP&S A Team | SECTION A

DATE: Wednesday, May 01, 2013 10:37:35 AM

SCALE 1:4 | CAD FILE: 12CandyA_CartPLTop1091_AF1091_020324 | SHEET 3 OF 3

DWG NOTES: (UNLESS OTHERWISE NOTED)

1) ALL UNITS: INCHES
2) Assemble with glue or acetone weld

MATERIAL: Polystyrene

TOLERANCES (UNLESS NOTED)

DECIMAL: X.X : ±0.015
X.XX : ±0.01
X.XXX : ±0.005

FRACTIONAL: ±1/32

NO. PARTS REQ'D: 1

RENSSELAER POLYTECHNIC INSTITUTE

Doser Pallet

DRAWN BY: Daniel Golding/Wesley Koo

E-MAIL: koow@rpi.edu **PHONE:** 650-804-4515

FACULTY ADVISOR: Samuel Chiappone **CHECKED: (INITIALS)**

SIZE **B** | **COURSE NAME/NUMBER:** MP&S A Team | SECTION A

DATE: Wednesday, May 01, 2013 10:22:00 AM

SCALE 1:2 | CAD FILE: 12CandyA_DoserPL1100_AF1100_020413 | SHEET 1 OF 3

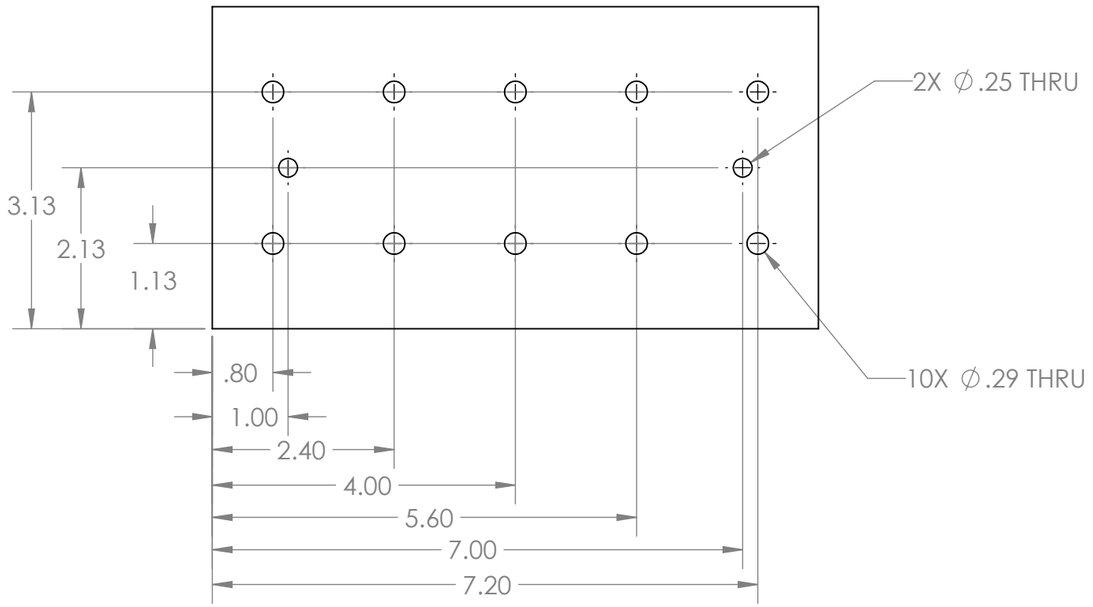

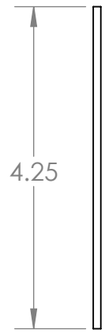

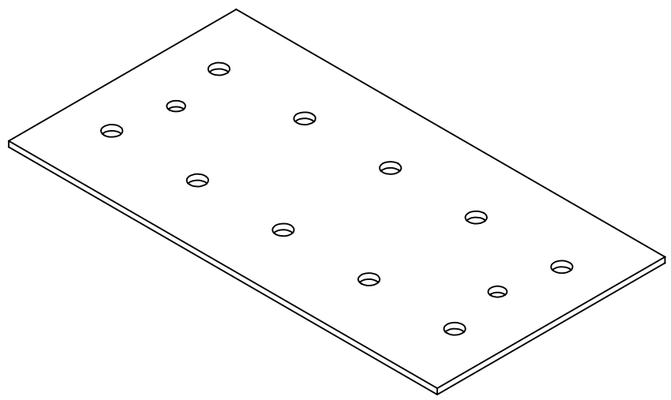

DWG NOTES: (UNLESS OTHERWISE NOTED)
1) ALL UNITS: INCHES
2) Cut with laser cutter

MATERIAL: Polystyrene

TOLERANCES (UNLESS NOTED)

DECIMAL: X.X : ±0.015, X.XX : ±0.01, X.XXX : ±0.005

FRACTIONAL: ±1/32

NO. PARTS REQ'D: 3

RENSSELAER POLYTECHNIC INSTITUTE

Doser Pallet Plate

DRAWN BY: Daniel Golding/Wesley Koo

E-MAIL: koow@rpi.edu **PHONE:** 650-804-4515

FACULTY ADVISOR: Samuel Chiappone **CHECKED: (INITIALS)**

SIZE **B** **COURSE NAME/NUMBER:** MP&S A Team SECTION A

DATE: Wednesday, May 01, 2013 10:22:00 AM

SCALE 1:2 CAD FILE: 12CandyA_DoserPlPlate1101_AF1101_020415 SHEET 2 OF 3

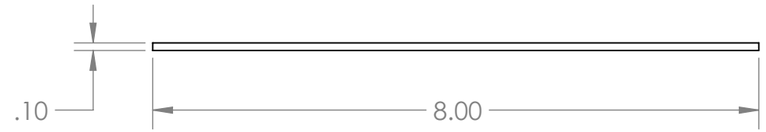

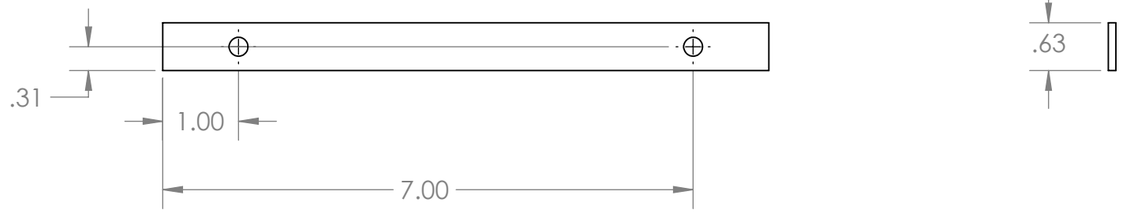

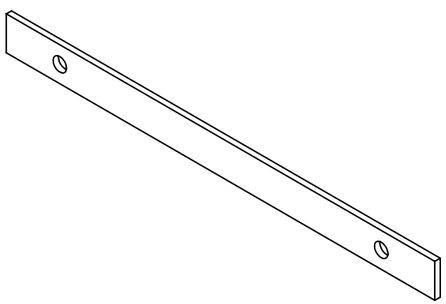

DWG NOTES: (UNLESS OTHERWISE NOTED)
1) ALL UNITS: INCHES
2) Cut with laser cutter

MATERIAL: Polystyrene

TOLERANCES (UNLESS NOTED)

DECIMAL: X.X : ±0.015, X.XX : ±0.01, X.XXX : ±0.005

FRACTIONAL: ±1/32

NO. PARTS REQ'D: 3

RENSSELAER POLYTECHNIC INSTITUTE

Doser Pallet Divider

DRAWN BY: Daniel Golding/Wesley Koo

E-MAIL: koow@rpi.edu **PHONE:** 650-804-4515

FACULTY ADVISOR: Samuel Chiappone **CHECKED: (INITIALS)**

SIZE **B** **COURSE NAME/NUMBER:** MP&S A Team SECTION A

DATE: Wednesday, May 01, 2013 10:22:00 AM

SCALE 1:2 CAD FILE: 12CandyA_DoserPLDivider1102_AF1102_020415 SHEET 3 OF 3

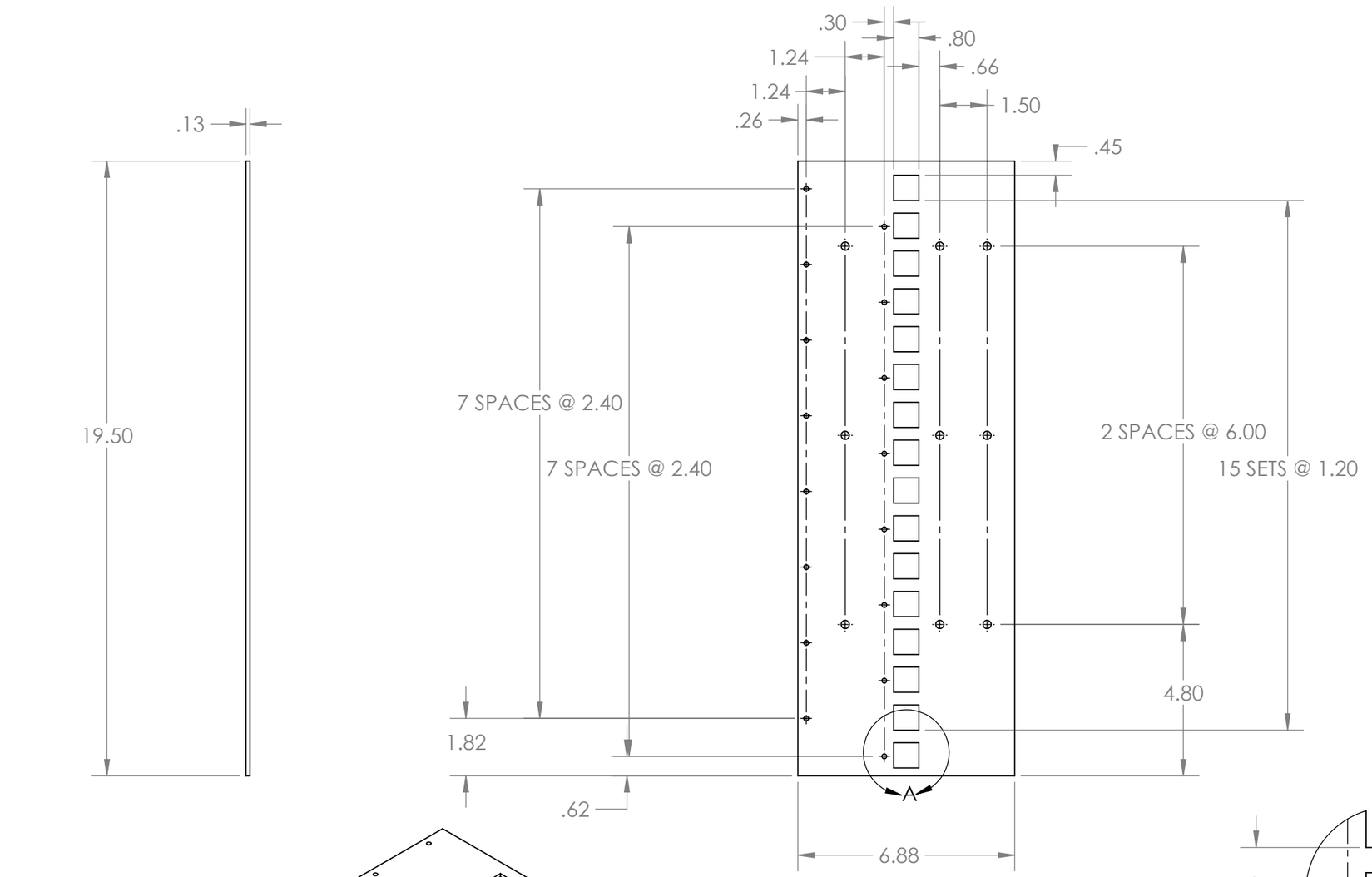

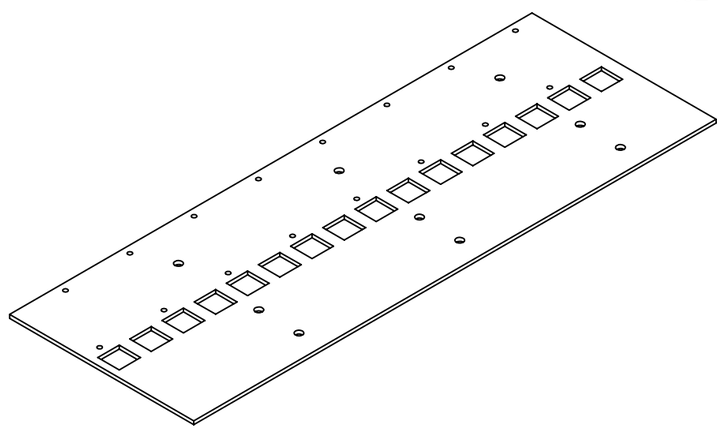

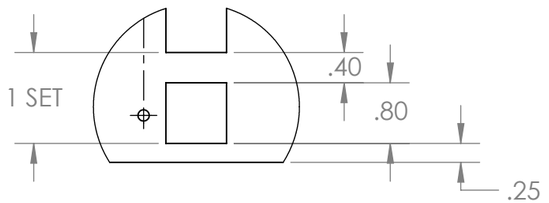

DETAIL A
SCALE 1 : 2

DWG NOTES: (UNLESS OTHERWISE NOTED)
1) ALL UNITS: INCHES
2) < FILL IN NOTES HERE >

MATERIAL: ABS

TOLERANCES (UNLESS NOTED)

DECIMAL: X.X : ±0.015, X.XX : ±0.01, X.XXX : ±0.005

FRACTIONAL: ±1/32

NO. PARTS REQ'D: 1

RENSSELAER POLYTECHNIC INSTITUTE

Electronics Pallet Lower

DRAWN BY: Michael Snyder/Wesley Koo

E-MAIL: koow@rpi.edu **PHONE:** 650-804-4515

FACULTY ADVISOR: Samuel Chiappone **CHECKED: (INITIALS)**

SIZE **B** | **COURSE NAME/NUMBER:** MP&S A Team | SECTION A

DATE: Monday, February 25, 2013 1:56:10 PM

SCALE 1:4 | CAD FILE: 12CandyA_ElectronicPLBottom1042_AF1042_040223 | SHEET 1 OF 1

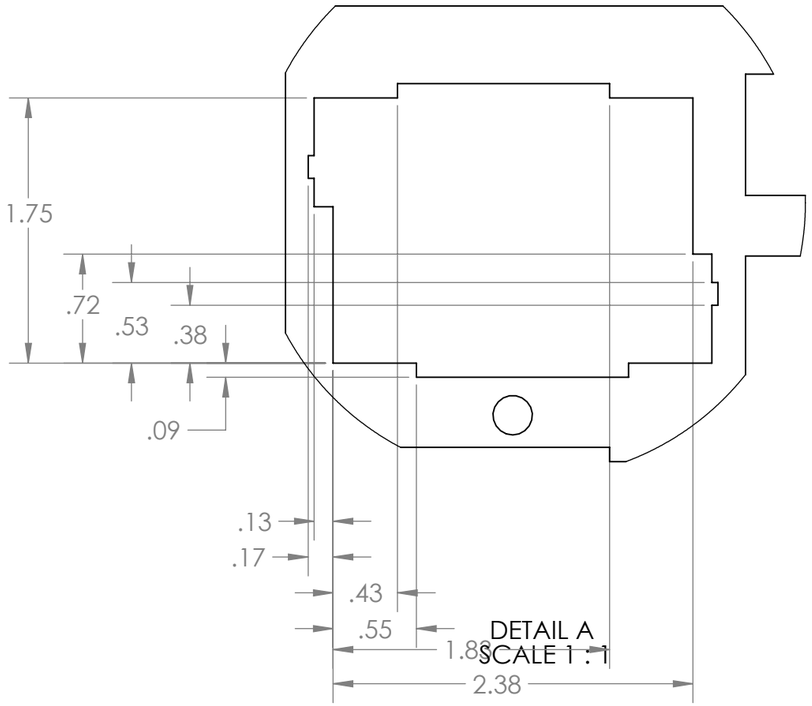

DETAIL A
SCALE 1 : 1

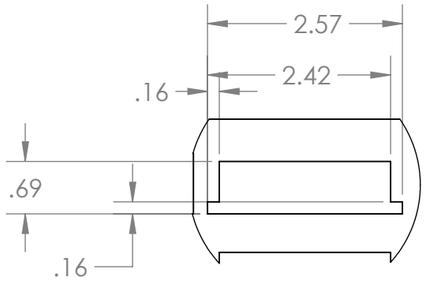

DETAIL B
SCALE 1 : 2

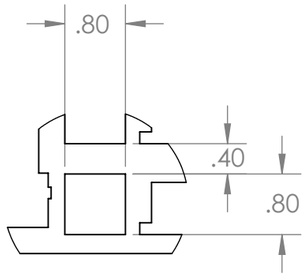

DETAIL C
SCALE 1 : 2

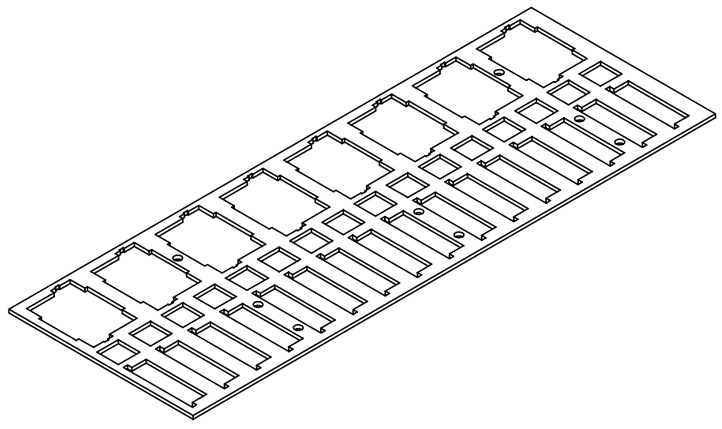

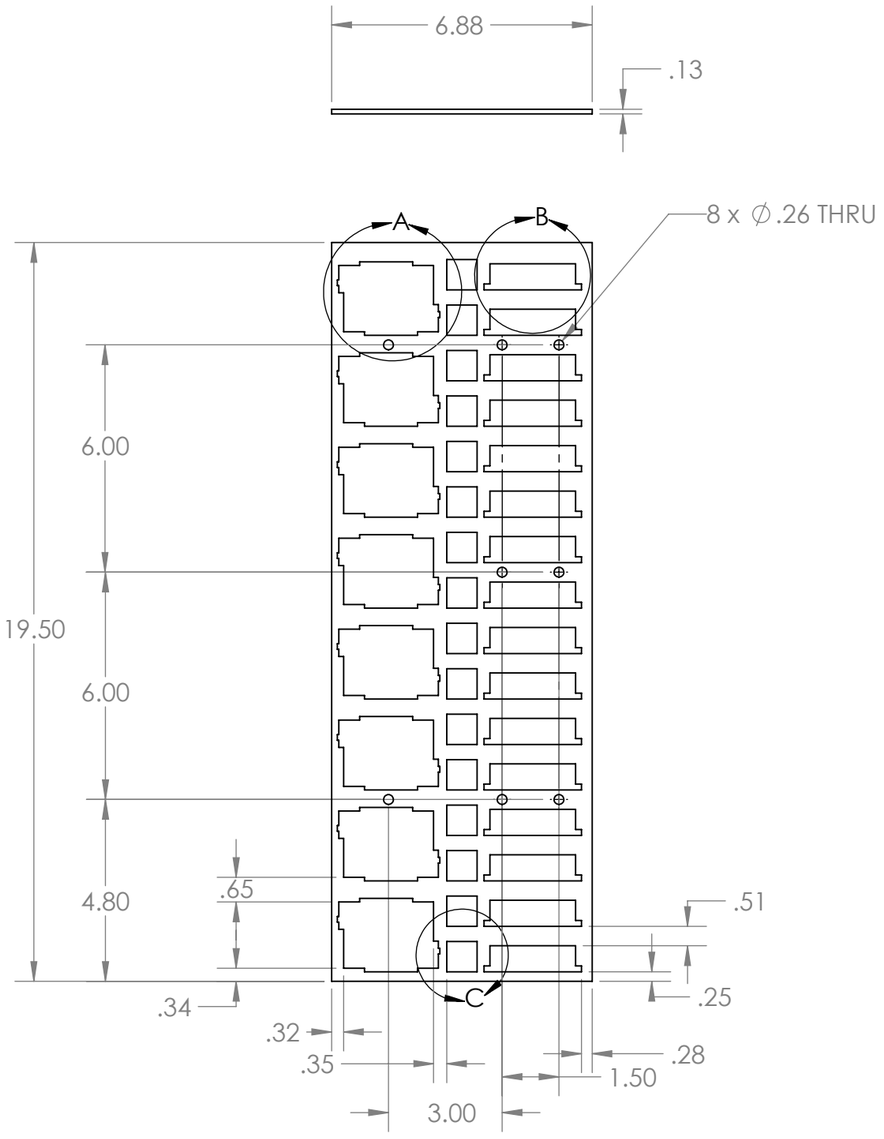

DWG NOTES: (UNLESS OTHERWISE NOTED)

1) ALL UNITS: INCHES
2) Spacing between identical cutouts is uniform. (i.e. spacing between each square is 0.400 in, etc.)

MATERIAL: ABS

TOLERANCES (UNLESS NOTED)

DECIMAL: X.X : ±0.015
X.XX : ±0.01
X.XXX : ±0.005

FRACTIONAL: ±1/32

NO. PARTS REQ'D: 1

RENSSELAER POLYTECHNIC INSTITUTE

Electronic Pallet Top

DRAWN BY: Michael Snyder/Wesley Koo

E-MAIL: koow@rpi.edu **PHONE:** 650-804-4515

FACULTY ADVISOR: Samuel Chiappone **CHECKED: (INITIALS)**

SIZE **B** | **COURSE NAME/NUMBER:** MP&S A Team | SECTION A

DATE: Monday, February 25, 2013 2:30:22 PM

SCALE 1:4 | CAD FILE: 12CandyA_ElectronicPcTop1041_AF1041_040223 | SHEET 1 OF 1

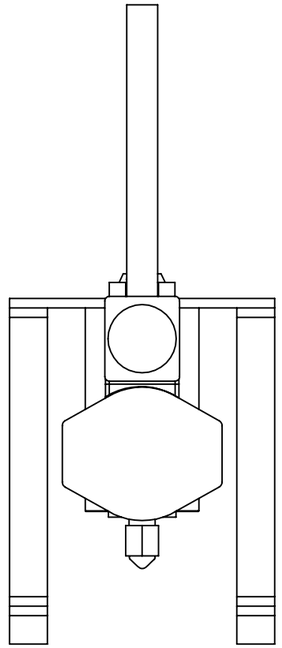

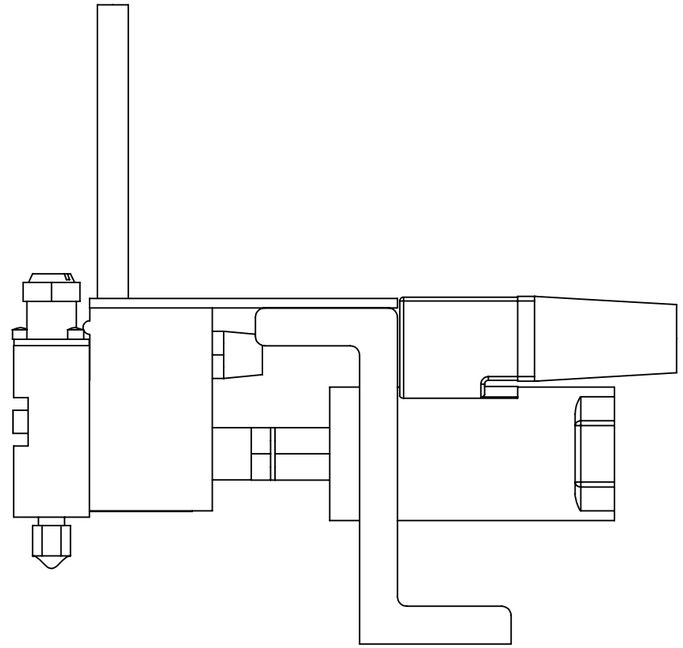

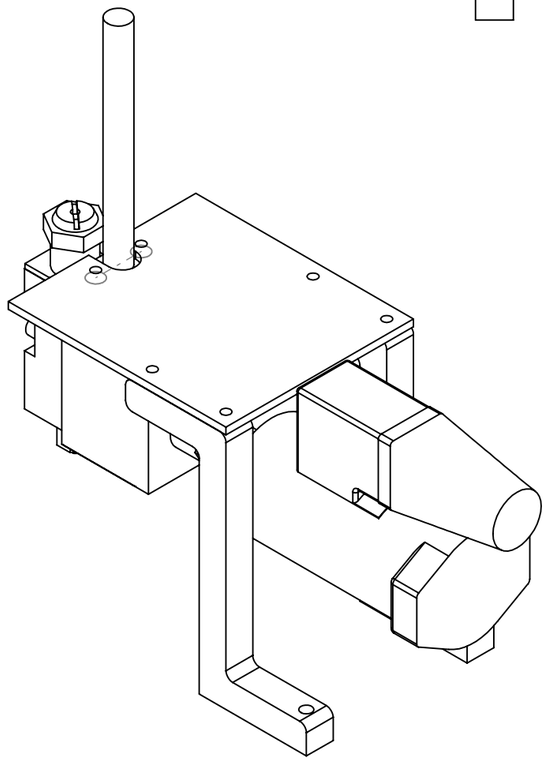

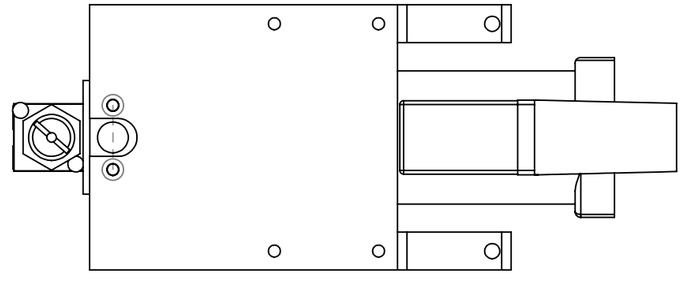

DWG NOTES: (UNLESS OTHERWISE NOTED)

1) ALL UNITS: INCHES
2) See next 2 sheets for part dimensions.
3) Items seen here that are not dimensioned are pre-existing parts.

MATERIAL: Aluminium

TOLERANCES (UNLESS NOTED)

DECIMAL: X.X : ±0.015
X.XX : ±0.01
X.XXX : ±0.005

FRACTIONAL: ±1/32

NO. PARTS REQ'D: 1

RENSSELAER POLYTECHNIC INSTITUTE

Glue Fixture

DRAWN BY: Michael Snyder/Wesley Koo

E-MAIL: koow@rpi.edu **PHONE:** 650-804-4515

FACULTY ADVISOR: Samuel Chiappone **CHECKED: (INITIALS)**

SIZE B | **COURSE NAME/NUMBER:** MP&S A Team | SECTION A

DATE: Tuesday, March 05, 2013 4:31:51 PM

SCALE 1:2 | CAD FILE: 12CandyA_GlueFX1070_AF1070_020213 | SHEET 1 OF 3

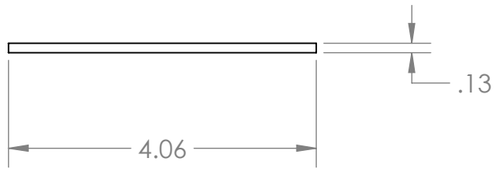

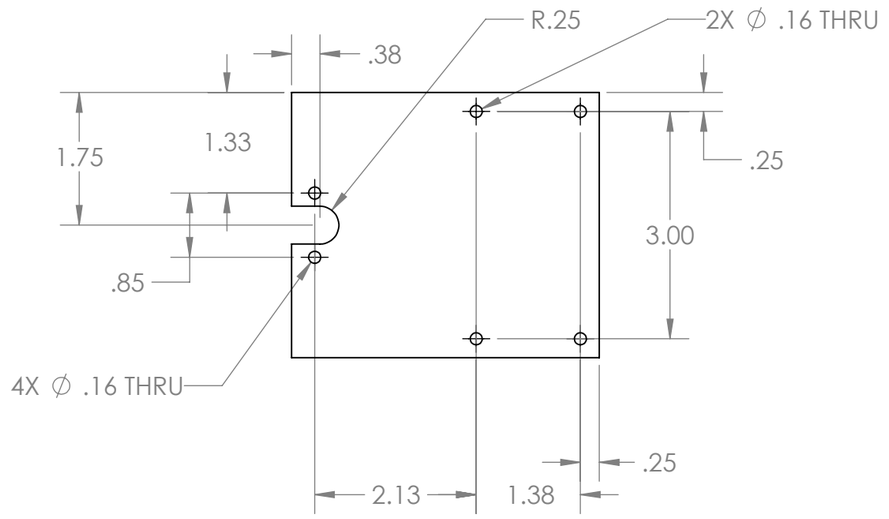

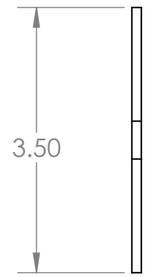

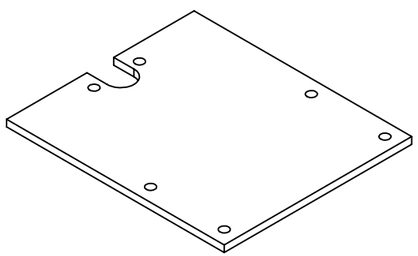

DWG NOTES: (UNLESS OTHERWISE NOTED)
1) ALL UNITS: INCHES
2) Plate should not be any longer than shown.

MATERIAL: Aluminium

TOLERANCES (UNLESS NOTED)

DECIMAL: X.X : ±0.015
X.XX : ±0.01
X.XXX : ±0.005

FRACTIONAL: ±1/32

NO. PARTS REQ'D: 1

RENSSELAER POLYTECHNIC INSTITUTE

Glue Fixture Plate

DRAWN BY: Michael Snyder/Wesley Koo

E-MAIL: koow@rpi.edu **PHONE:** 650-804-4515

FACULTY ADVISOR: Samuel Chiappone **CHECKED: (INITIALS)**

SIZE B | **COURSE NAME/NUMBER:** MP&S A Team | SECTION A
DATE: Tuesday, March 05, 2013 4:31:51 PM

SCALE 1:2 | CAD FILE: 12CandyA_GlueFIXPlate1071_AF1071_020213 | SHEET 2 OF 3

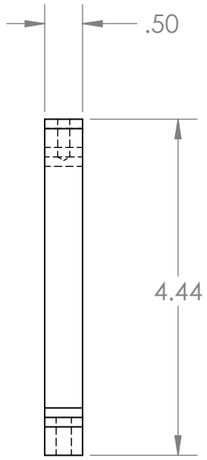

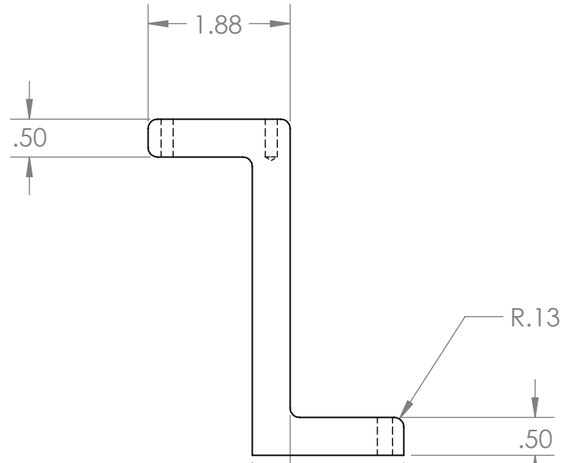

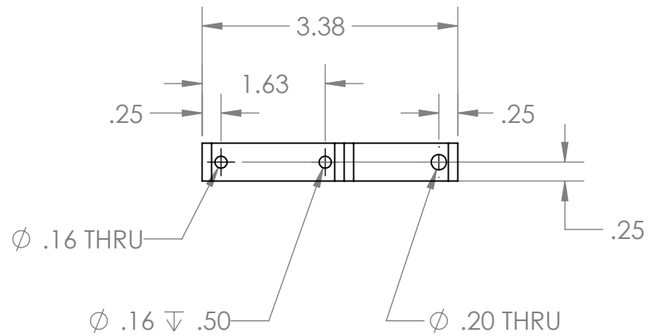

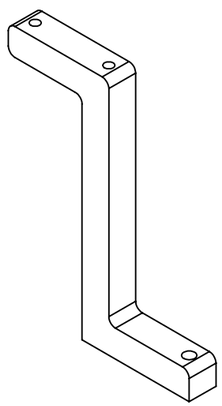

DWG NOTES: (UNLESS OTHERWISE NOTED)

1) ALL UNITS: INCHES
2) Outer design not required to be exact, but hole location, spacing and height must be within tolerance.

MATERIAL: Aluminium

TOLERANCES (UNLESS NOTED)

DECIMAL: X.X : ±0.015
X.XX : ±0.01
X.XXX : ±0.005

FRACTIONAL: ±1/32

NO. PARTS REQ'D: 2

RENSSELAER POLYTECHNIC INSTITUTE

Glue Fixture Stand

DRAWN BY: Michael Snyder/Wesley Koo

E-MAIL: koow@rpi.edu **PHONE:** 650-804-4515

FACULTY ADVISOR: Samuel Chiappone **CHECKED: (INITIALS)**

SIZE **B** | **COURSE NAME/NUMBER:** MP&S A Team | SECTION A

DATE: Tuesday, March 05, 2013 4:31:51 PM

SCALE 1:2 | CAD FILE: I:2Candy\A_GlueFXStand1072_AF1072_020213 | SHEET 3 OF 3

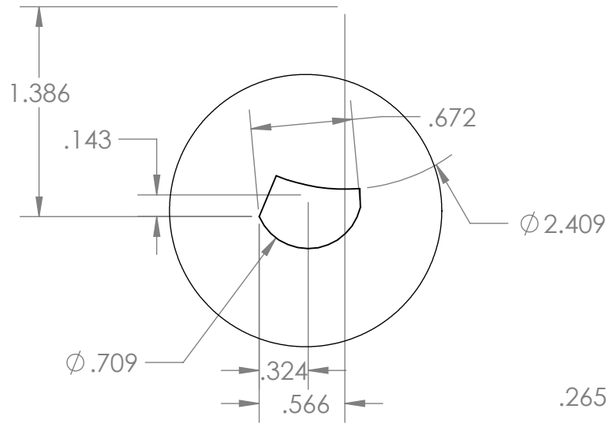

DETAIL A
SCALE 1 : 1

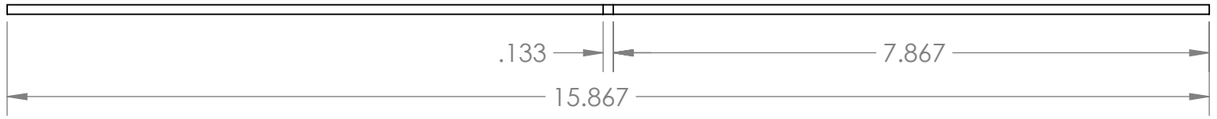

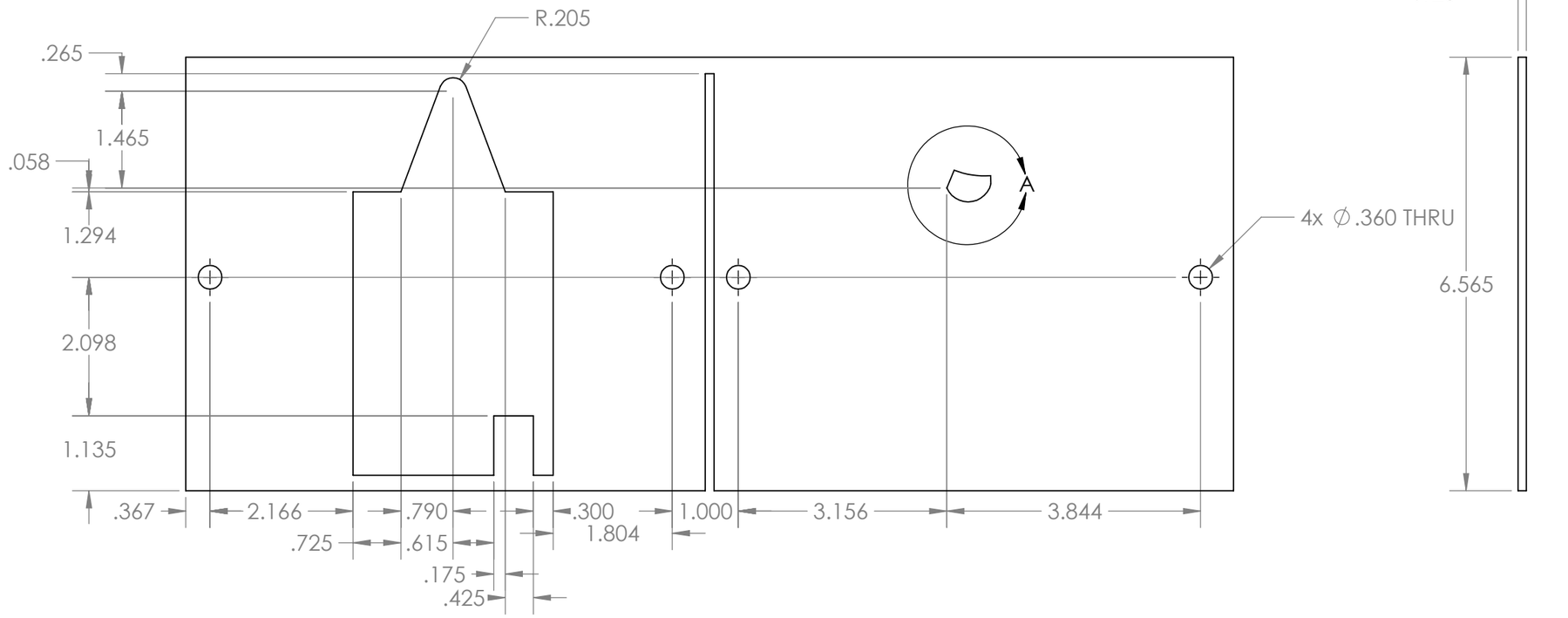

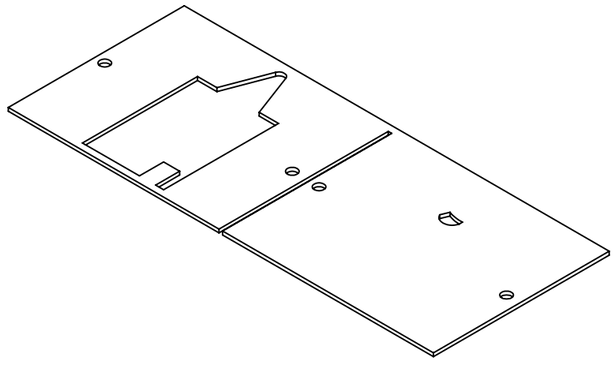

DWG NOTES: (UNLESS OTHERWISE NOTED)
1) ALL UNITS: INCHES
2) Part will be waterjet, hence the double piece

MATERIAL: Nylon

TOLERANCES (UNLESS NOTED)

DECIMAL: X.X : ±0.015
X.XX : ±0.01
X.XXX : ±0.005

FRACTIONAL: ±1/32

NO. PARTS REQ'D: 1

RENSSELAER POLYTECHNIC INSTITUTE

Heat Stake Fixture

DRAWN BY: Daniel Golding/Wesley Koo

E-MAIL: koow@rpi.edu **PHONE:** 650-804-4515

FACULTY ADVISOR: Samuel Chiappone **CHECKED: (INITIALS)**

SIZE **B** | **COURSE NAME/NUMBER:** MP&S A Team | SECTION A

DATE: Tuesday, April 09, 2013 11:45:52 AM

SCALE 1:2 | CAD FILE: 12CandyA_HeatStakeFX1230_AF1230_20409 | SHEET 1 OF 1

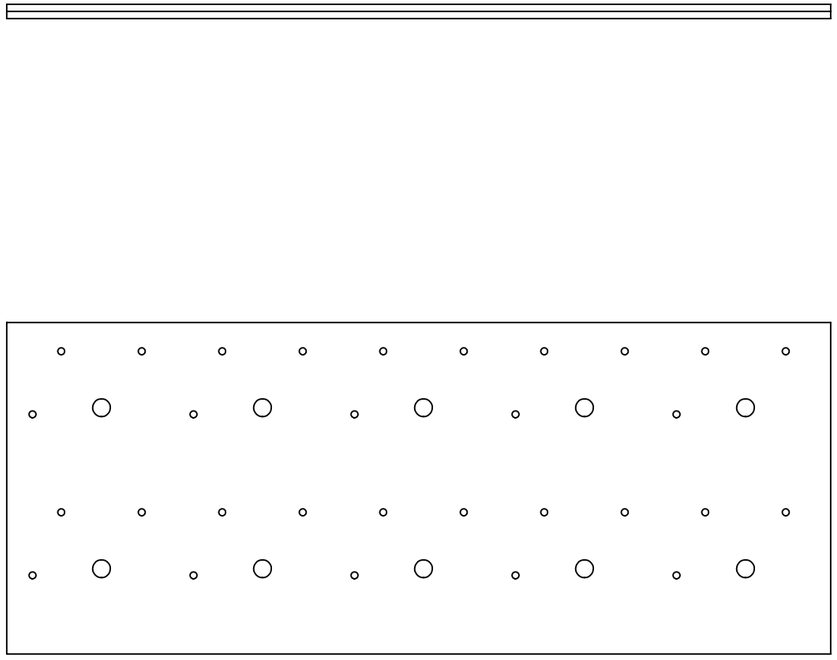

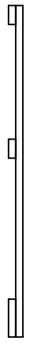

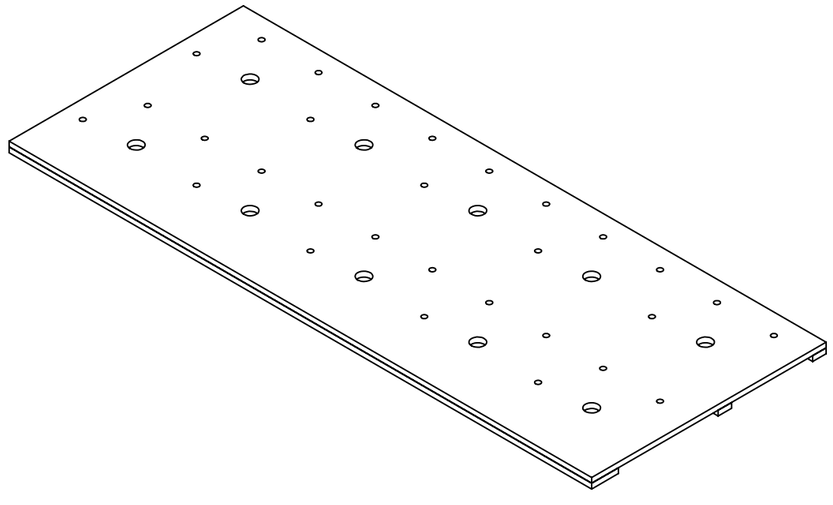

DWG NOTES: (UNLESS OTHERWISE NOTED)
1) ALL UNITS: INCHES

MATERIAL: ABS

TOLERANCES (UNLESS NOTED)

DECIMAL: X.X : ±0.015
X.XX : ±0.01
X.XXX : ±0.005

FRACTIONAL: ±1/32

NO. PARTS REQ'D: 1

RENSSELAER POLYTECHNIC INSTITUTE

Jar Pallet

DRAWN BY: Daniel Golding/Wesley Koo

E-MAIL: koow@rpi.edu **PHONE:** 650-804-4515

FACULTY ADVISOR: Samuel Chiappone **CHECKED: (INITIALS)**

SIZE **B** | **COURSE NAME/NUMBER:** MP&S A Team | SECTION A

DATE: Wednesday, May 01, 2013 10:02:42 AM

SCALE 1:4 | CAD FILE: 12CandyA_JarPL1110_AF1110_020415 | SHEET 1 OF 3

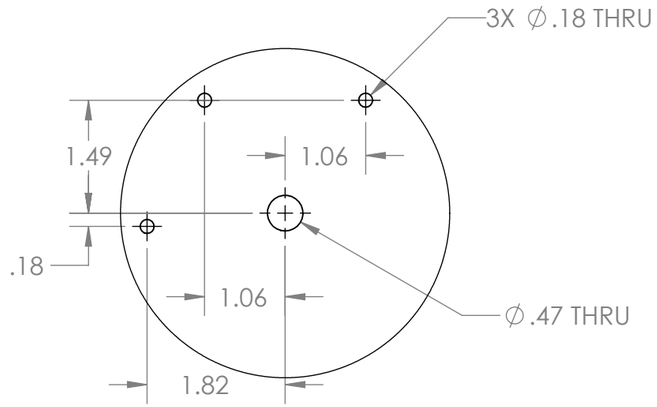

10X
DETAIL A
SCALE 1 : 2

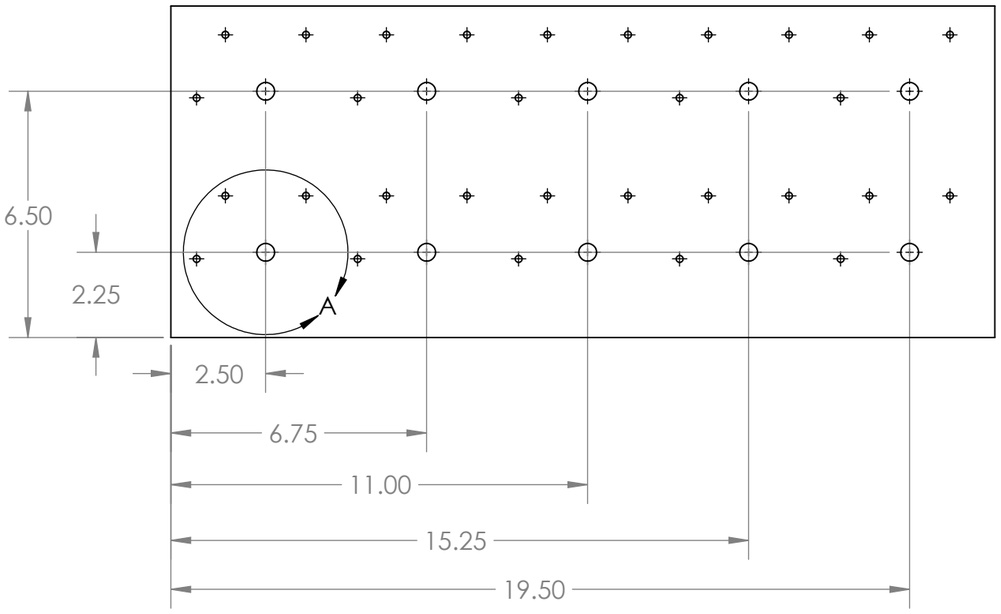

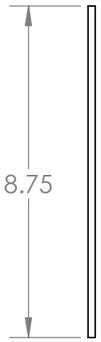

DWG NOTES: (UNLESS OTHERWISE NOTED)
1) ALL UNITS: INCHES

MATERIAL: ABS

TOLERANCES (UNLESS NOTED)
DECIMAL: X.X : ±0.015
X.XX : ±0.01
X.XXX : ±0.005
FRACTIONAL: ±1/32

NO. PARTS REQ'D: 1

RENSSELAER POLYTECHNIC INSTITUTE

Jar Pallet Top

DRAWN BY: Daniel Golding/Wesley Koo
E-MAIL: koow@rpi.edu **PHONE:** 650-804-4515
FACULTY ADVISOR: Samuel Chiappone **CHECKED: (INITIALS)**
SIZE **B** **COURSE NAME/NUMBER:** MP&S A Team SECTION A
DATE: Wednesday, May 01, 2013 10:02:42 AM
SCALE 1:4 CAD FILE: I2CandyA_JarPLTop1111_AF1111_020415 SHEET 2 OF 3

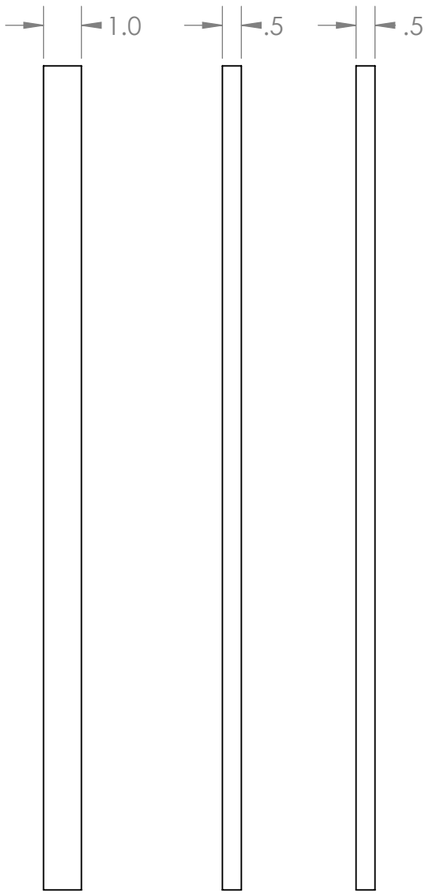

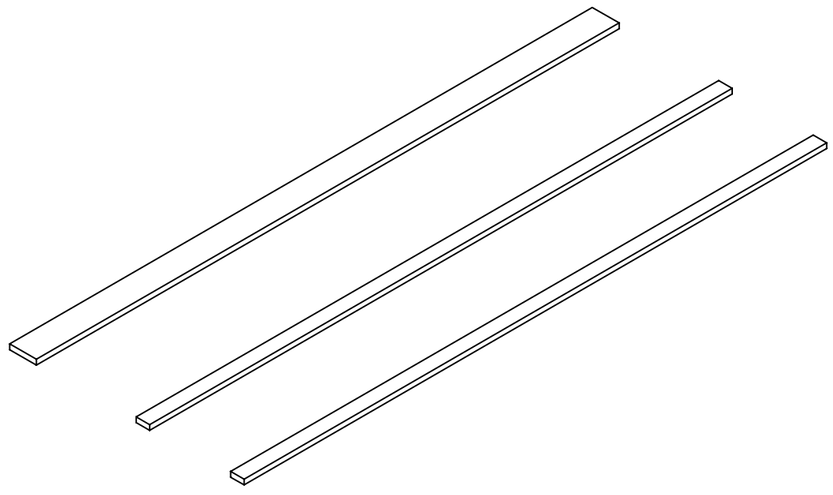

DWG NOTES: (UNLESS OTHERWISE NOTED)
1) ALL UNITS: INCHES

MATERIAL: ABS

TOLERANCES (UNLESS NOTED)

DECIMAL: X.X : ±0.015
X.XX : ±0.01
X.XXX : ±0.005

FRACTIONAL: ±1/32

NO. PARTS REQ'D: 1

RENSSELAER POLYTECHNIC INSTITUTE

Jar Pallet Risers

DRAWN BY: Daniel Golding/Wesley Koo
E-MAIL: koow@rpi.edu **PHONE:** 650-804-4515
FACULTY ADVISOR: Samuel Chiappone **CHECKED: (INITIALS)**

SIZE **B** | **COURSE NAME/NUMBER:** MP&S A Team | SECTION A
DATE: Wednesday, May 01, 2013 10:02:42 AM

SCALE 1:4 | CAD FILE: I2CandyA_JarPLRisers1112_AF1112_020415 | SHEET 3 OF 3

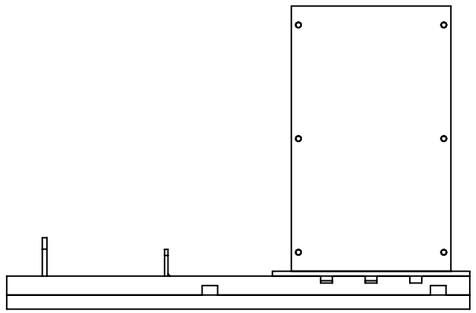

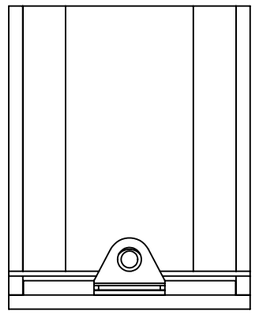

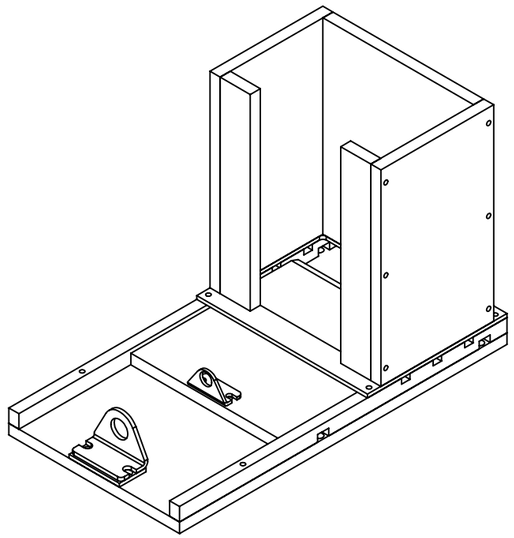

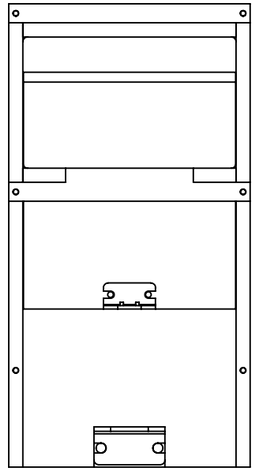

DWG NOTES: (UNLESS OTHERWISE NOTED)

1) ALL UNITS: INCHES
2) Use available material
3) Pneumatic actuator required

MATERIAL: Lexan

TOLERANCES (UNLESS NOTED)

DECIMAL: X.X : ±0.015
X.XX : ±0.01
X.XXX : ±0.005

FRACTIONAL: ±1/32

NO. PARTS REQ'D: 1

RENSSELAER POLYTECHNIC INSTITUTE

Lower Base Feeder

DRAWN BY: Michael Snyder/Wesley Koo

E-MAIL: koow@rpi.edu **PHONE:** 650-804-4515

FACULTY ADVISOR: Samuel Chiappone **CHECKED: (INITIALS)**

SIZE **B** | **COURSE NAME/NUMBER:** MP&S A Team | SECTION A

DATE: Friday, March 15, 2013 8:42:20 PM

SCALE 1:4 | CAD FILE: 12CandyA_LowerBaseFD1030_AF1030_040223 | SHEET 1 OF 9

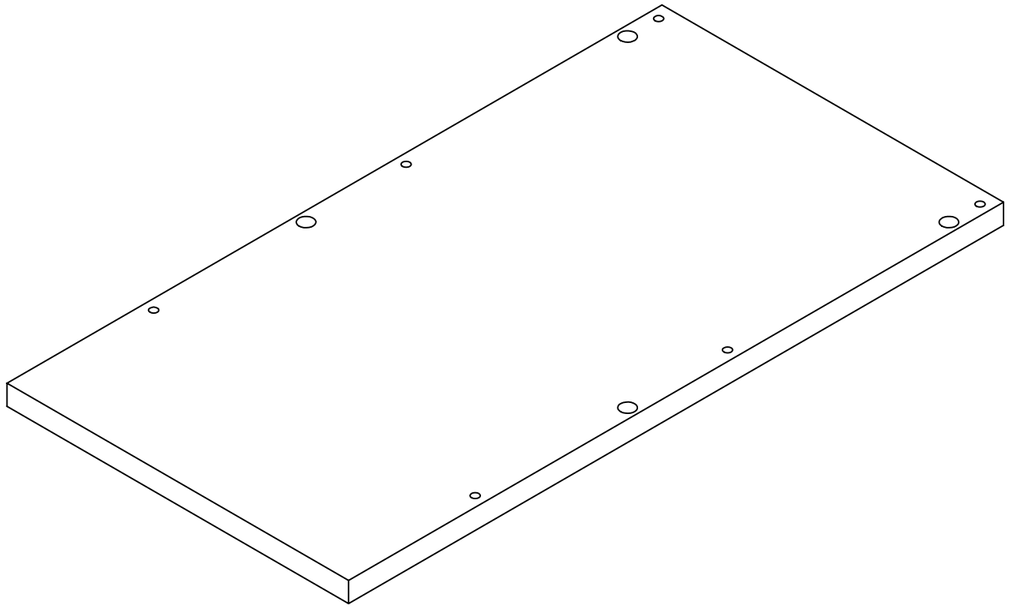

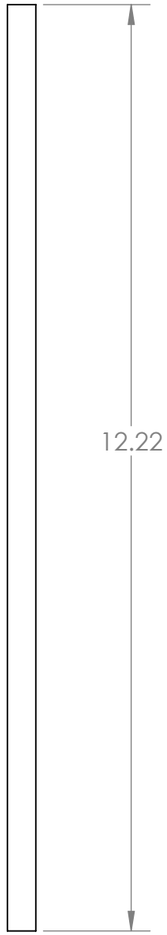

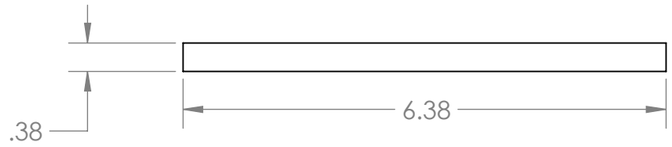

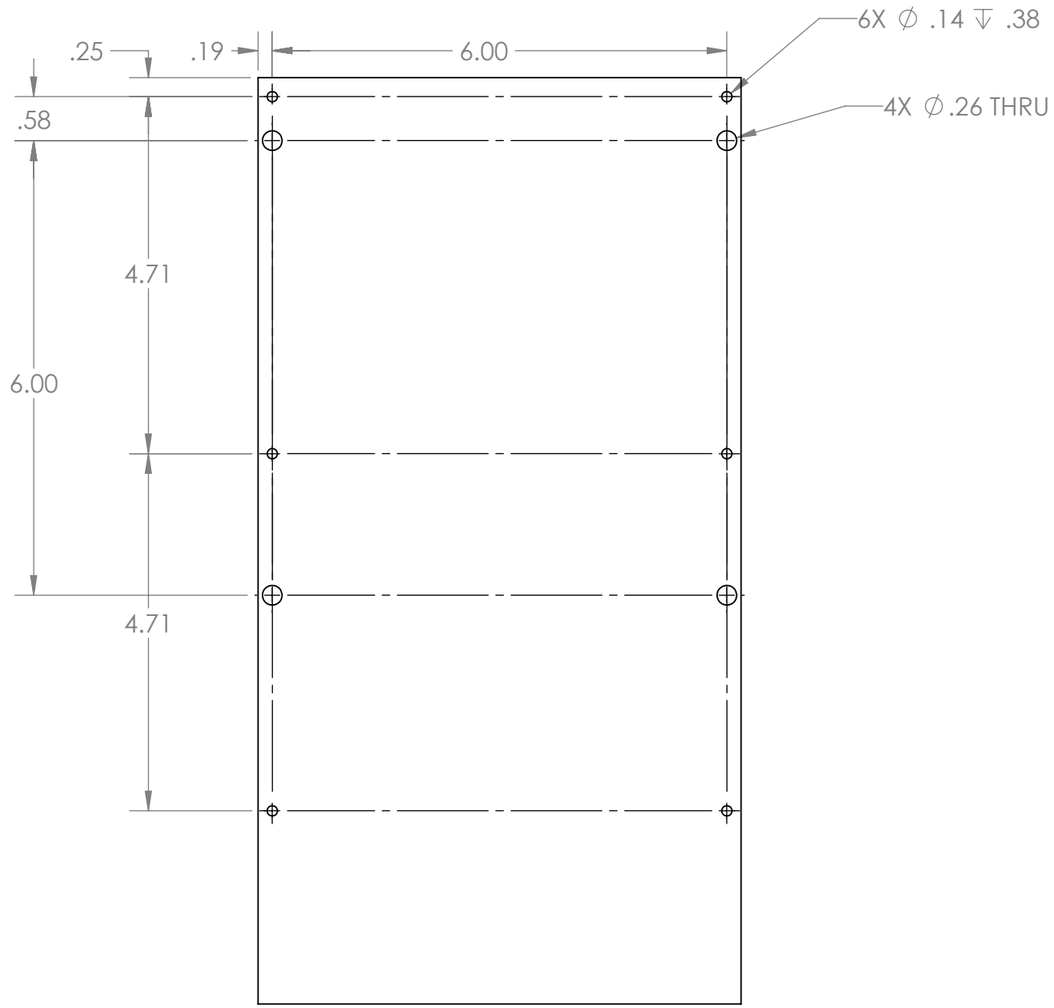

DWG NOTES: (UNLESS OTHERWISE NOTED)

1) ALL UNITS: INCHES
2) Use available material

MATERIAL: Lexan

TOLERANCES (UNLESS NOTED)

DECIMAL: X.X : ±0.015
X.XX : ±0.01
X.XXX : ±0.005

FRACTIONAL: ±1/32

NO. PARTS REQ'D: 1

RENSSELAER POLYTECHNIC INSTITUTE

Lower Base Feeder Base

DRAWN BY: Michael Snyder/Wesley Koo

E-MAIL: koow@rpi.edu **PHONE:** 650-804-4515

FACULTY ADVISOR: Samuel Chiappone **CHECKED: (INITIALS)**

SIZE **B** | **COURSE NAME/NUMBER:** MP&S A Team | SECTION A

DATE: Friday, March 15, 2013 8:42:20 PM

SCALE 1:2 | CAD FILE: 12CandyA_LowerBaseFDBase1031_AF1031_040223 | SHEET 2 OF 9

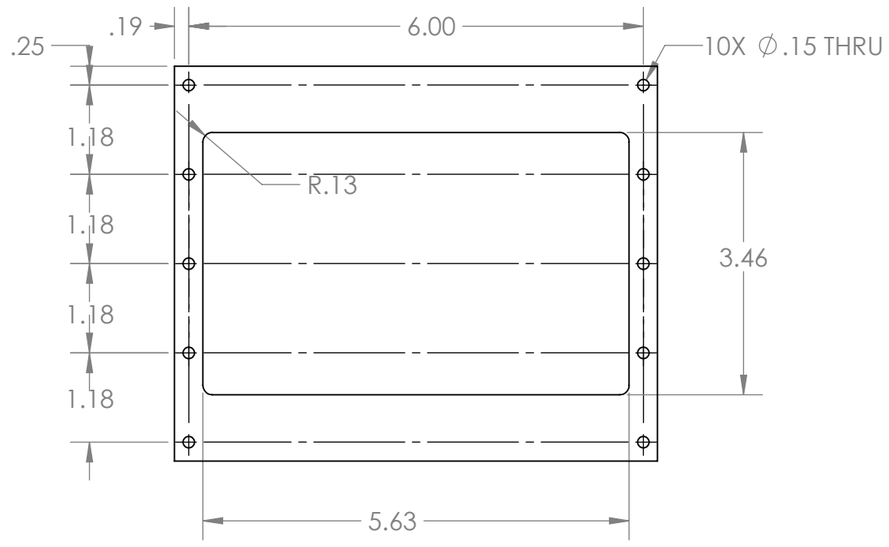

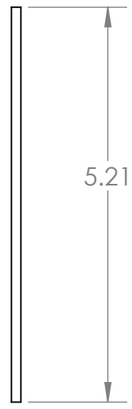

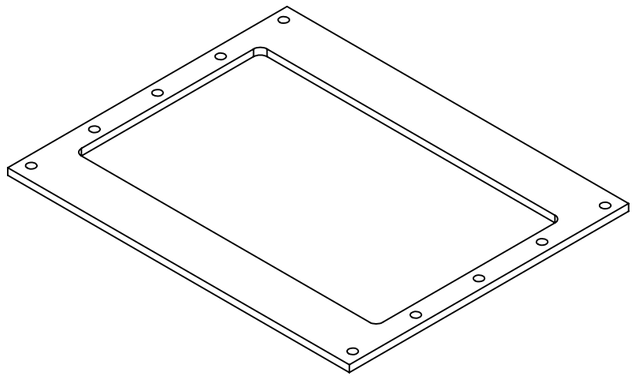

DWG NOTES: (UNLESS OTHERWISE NOTED)

1) ALL UNITS: INCHES
2) Use available material
3) Symmetric where applicable

MATERIAL: Lexan

TOLERANCES (UNLESS NOTED)

DECIMAL: X.X : ±0.015
X.XX : ±0.01
X.XXX : ±0.005

FRACTIONAL: ±1/32

NO. PARTS REQ'D: 1

RENSSELAER POLYTECHNIC INSTITUTE

Lower Base Feeder Connector

DRAWN BY: Michael Snyder/Wesley Koo
E-MAIL: koow@rpi.edu **PHONE:** 650-804-4515
FACULTY ADVISOR: Samuel Chiappone **CHECKED: (INITIALS)**

SIZE B | **COURSE NAME/NUMBER:** MP&S A Team | SECTION A
DATE: Friday, March 15, 2013 8:42:20 PM
SCALE 1:2 | CAD FILE: 12CandyA_LowerBaseFDConnector_AF1032_040223 | SHEET 3 OF 9

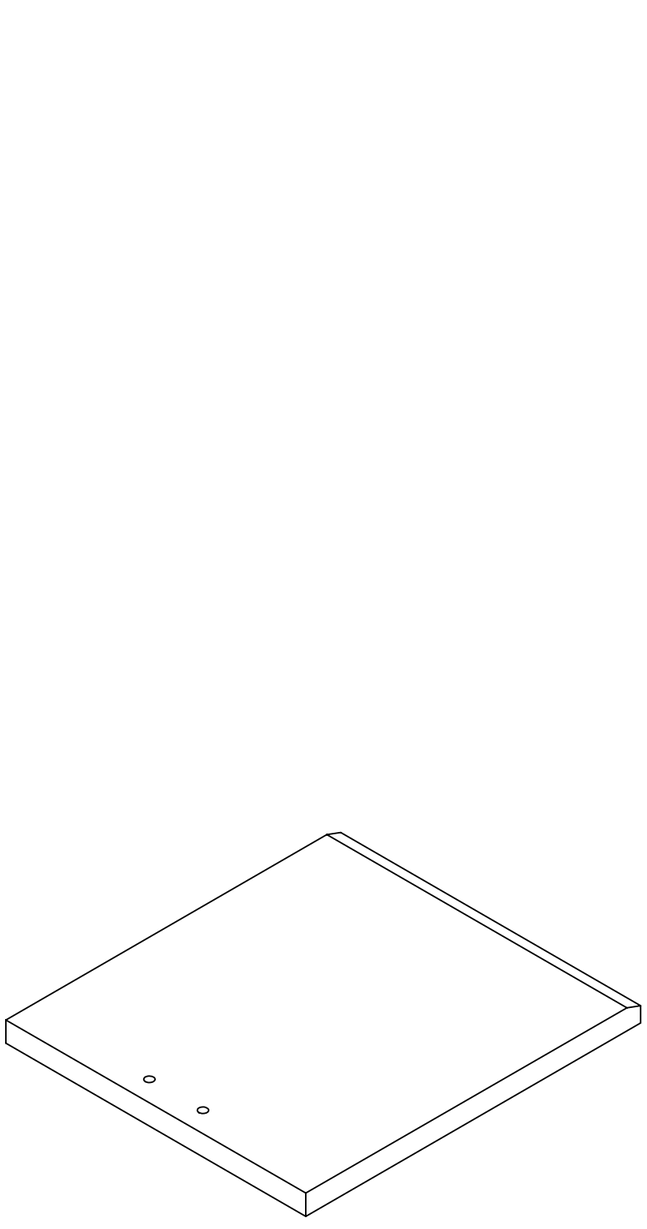

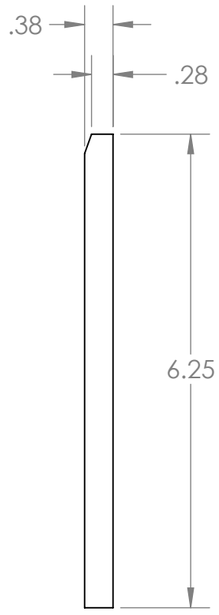

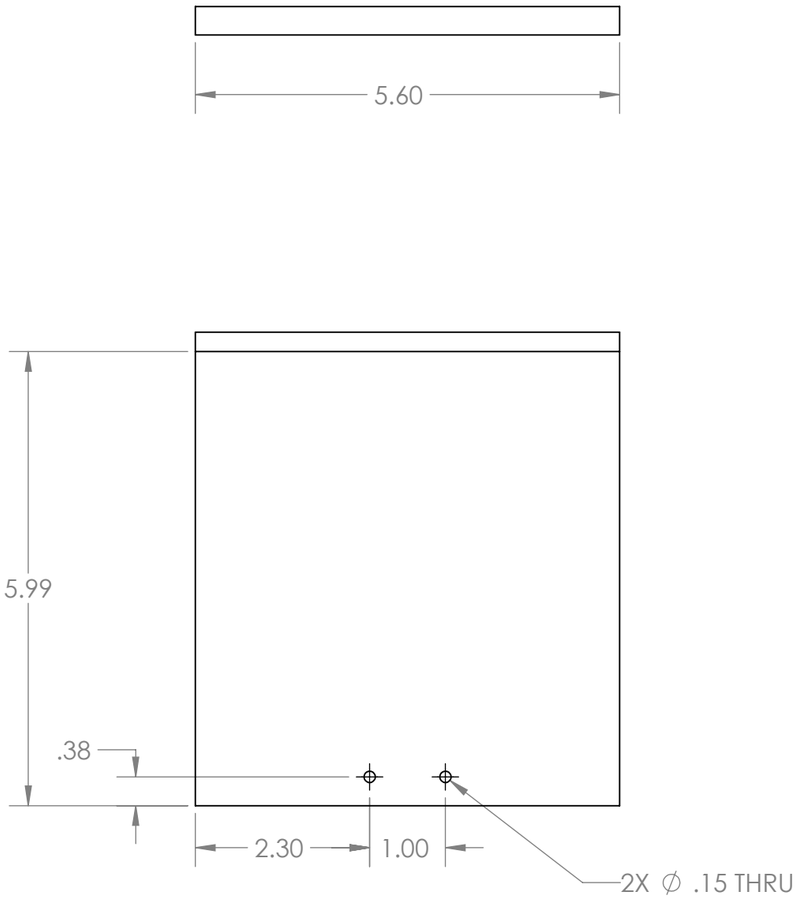

DWG NOTES: (UNLESS OTHERWISE NOTED)
1) ALL UNITS: INCHES
2) Use available material

MATERIAL: Lexan

TOLERANCES (UNLESS NOTED)

DECIMAL: X.X : ±0.015
X.XX : ±0.01
X.XXX : ±0.005

FRACTIONAL: ±1/32

NO. PARTS REQ'D: 1

RENSSELAER POLYTECHNIC INSTITUTE

Lower Base Feeder Pusher

DRAWN BY: Michael Snyder/Wesley Koo

E-MAIL: koow@rpi.edu **PHONE:** 650-804-4515

FACULTY ADVISOR: Samuel Chiappone **CHECKED: (INITIALS)**

SIZE **B** | **COURSE NAME/NUMBER:** MP&S A Team | SECTION A

DATE: Friday, March 15, 2013 8:42:20 PM

SCALE 1:2 | CAD FILE: 12CandyA_LowerBaseFDPusher1034_AF1034_040223 | SHEET 4 OF 9

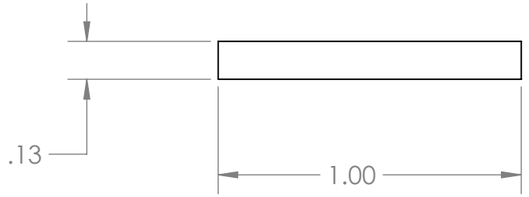

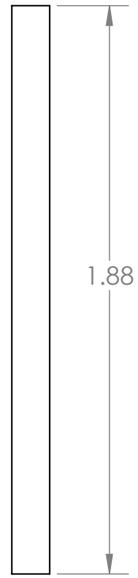

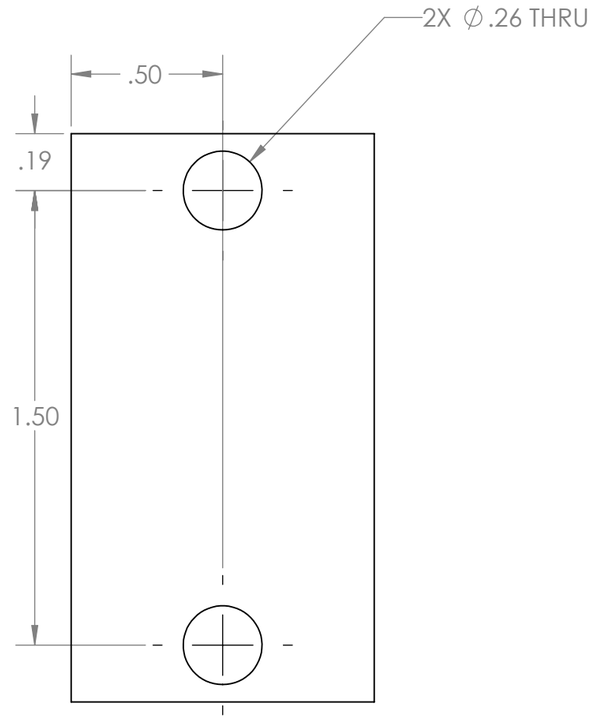

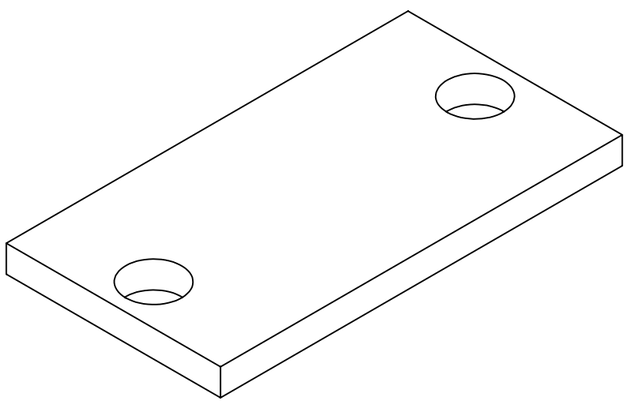

DWG NOTES: (UNLESS OTHERWISE NOTED)

1) ALL UNITS: INCHES
2) Use available material
3) Build to fit large bracket

MATERIAL: Lexan

TOLERANCES (UNLESS NOTED)

DECIMAL: X.X : ±0.015
X.XX : ±0.01
X.XXX : ±0.005

FRACTIONAL: ±1/32

NO. PARTS REQ'D: 1

RENSSELAER POLYTECHNIC INSTITUTE

Lower Base Feeder Standoff

DRAWN BY: Michael Snyder/Wesley Koo

E-MAIL: koow@rpi.edu **PHONE:** 650-804-4515

FACULTY ADVISOR: Samuel Chiappone **CHECKED: (INITIALS)**

SIZE **B** **COURSE NAME/NUMBER:** MP&S A Team SECTION A

DATE: Friday, March 15, 2013 8:42:20 PM

SCALE 2:1 CAD FILE: 12CandyA_LowerBaseFDStandoff1036_AT1036_040223 SHEET 5 OF 9

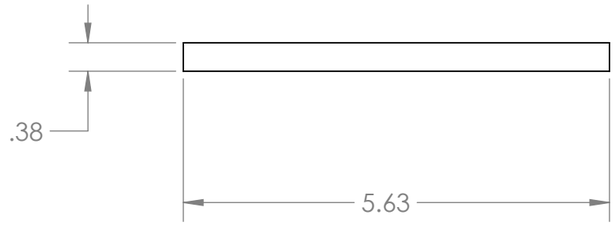

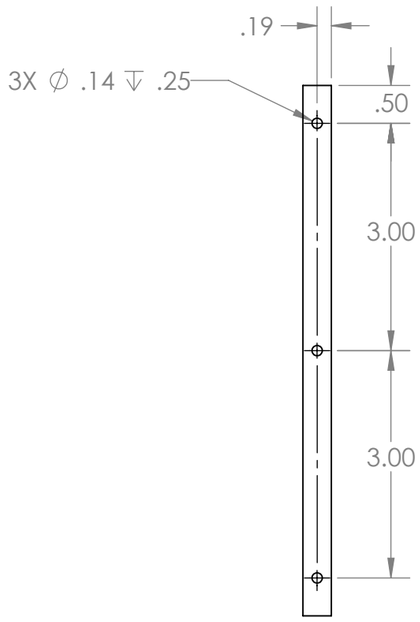

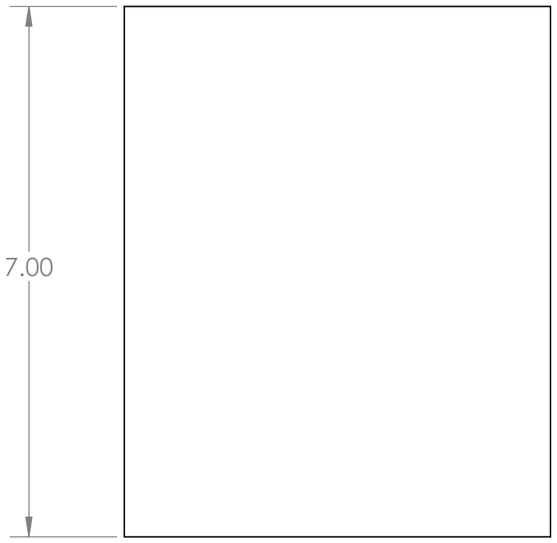

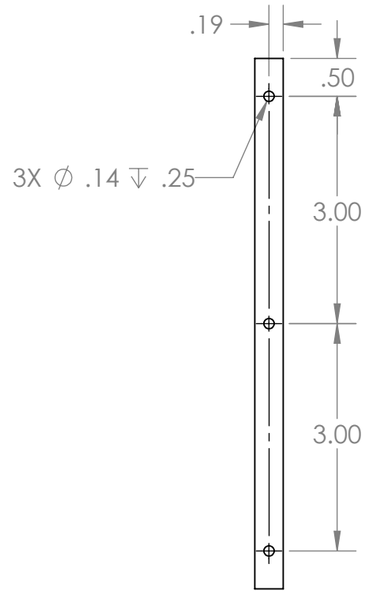

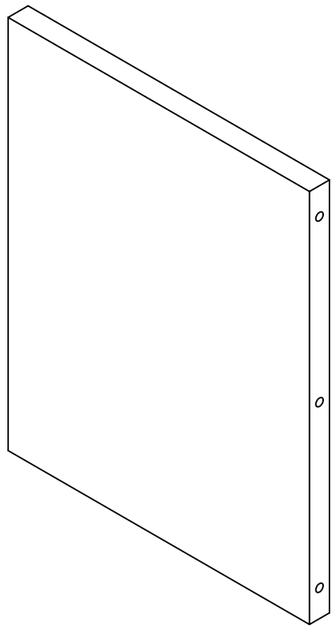

DWG NOTES: (UNLESS OTHERWISE NOTED)
1) ALL UNITS: INCHES
2) Use available material

MATERIAL: Lexan

TOLERANCES (UNLESS NOTED)

DECIMAL: X.X : ±0.015, X.XX : ±0.01, X.XXX : ±0.005

FRACTIONAL: ±1/32

NO. PARTS REQ'D: 1

RENSSELAER POLYTECHNIC INSTITUTE

Lower Base Feeder Tower 1

DRAWN BY: Michael Snyder/Wesley Koo

E-MAIL: koow@rpi.edu **PHONE:** 650-804-4515

FACULTY ADVISOR: Samuel Chiappone **CHECKED: (INITIALS)**

SIZE **B** **COURSE NAME/NUMBER:** MP&S A Team SECTION A

DATE: Friday, March 15, 2013 8:42:20 PM

SCALE 1:2 CAD FILE: 12CandyA_LowerBaseFDTower1037_AF1037_040223 SHEET 6 OF 9

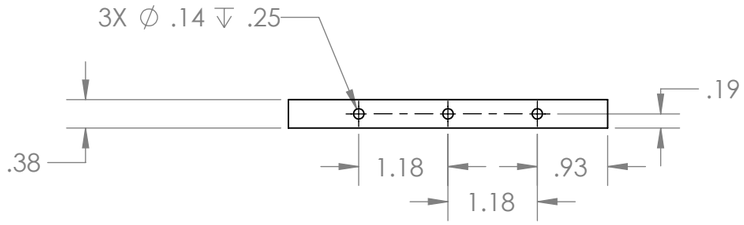

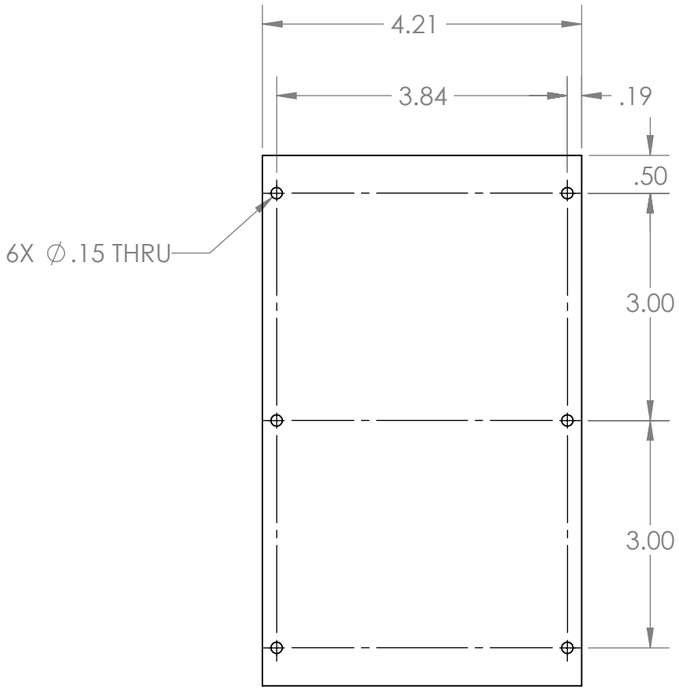

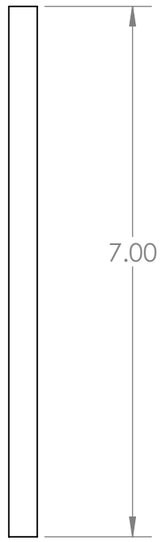

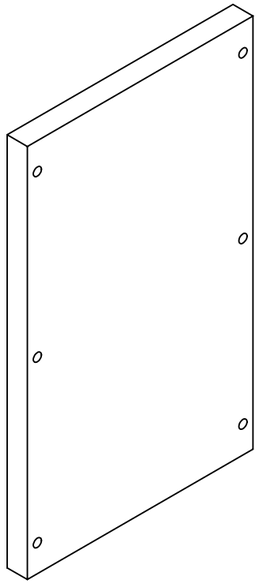

DWG NOTES: (UNLESS OTHERWISE NOTED)
1) ALL UNITS: INCHES
2) Use available material

MATERIAL: Lexan

TOLERANCES (UNLESS NOTED)

DECIMAL: X.X : ±0.015, X.XX : ±0.01, X.XXX : ±0.005

FRACTIONAL: ±1/32

NO. PARTS REQ'D: 2

RENSSELAER POLYTECHNIC INSTITUTE

Lower Base Feeder Tower 2

DRAWN BY: Michael Snyder/Wesley Koo

E-MAIL: koow@rpi.edu **PHONE:** 650-804-4515

FACULTY ADVISOR: Samuel Chiappone **CHECKED: (INITIALS)**

SIZE **B** | **COURSE NAME/NUMBER:** MP&S A Team | SECTION A

DATE: Friday, March 15, 2013 8:42:20 PM

SCALE 1:2 | CAD FILE: I:2Candy\A_LowerBaseFDTower1038_AF1038_040223 | SHEET 7 OF 9

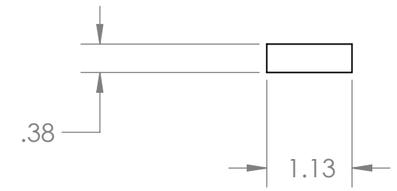

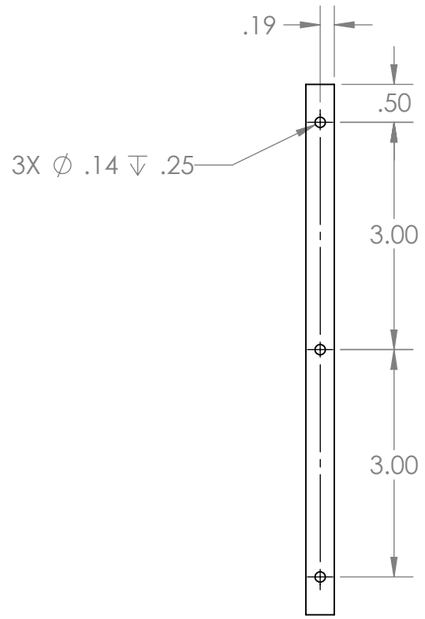

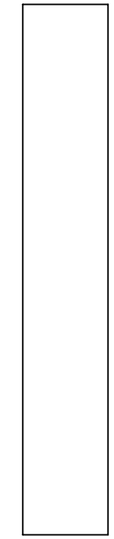

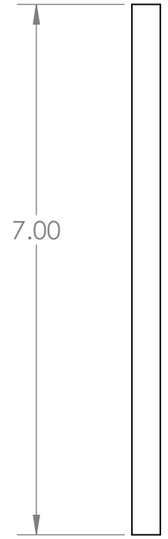

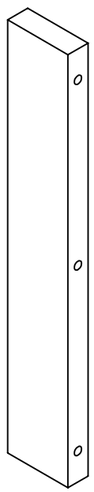

DWG NOTES: (UNLESS OTHERWISE NOTED)
1) ALL UNITS: INCHES
2) Use available material

MATERIAL: Lexan

TOLERANCES (UNLESS NOTED)

DECIMAL: X.X : ±0.015
X.XX : ±0.01
X.XXX : ±0.005

FRACTIONAL: ±1/32

NO. PARTS REQ'D: 2

RENSSELAER POLYTECHNIC INSTITUTE

Lower Base Feeder Tower 3

DRAWN BY: Michael Snyder/Wesley Koo

E-MAIL: koow@rpi.edu **PHONE:** 650-804-4515

FACULTY ADVISOR: Samuel Chiappone **CHECKED: (INITIALS)**

SIZE **B** | **COURSE NAME/NUMBER:** MP&S A Team | SECTION A

DATE: Friday, March 15, 2013 8:42:20 PM

SCALE 1:2 | CAD FILE: 12CandyA_LowerBaseFDTower1039_AF1039_040223 | SHEET 8 OF 9

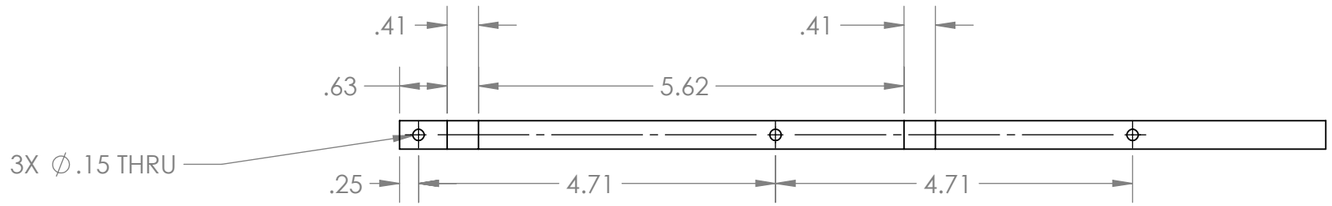

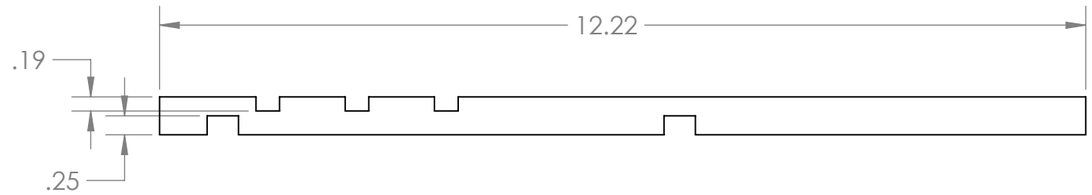

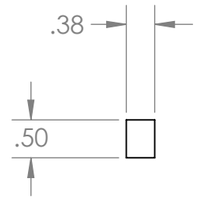

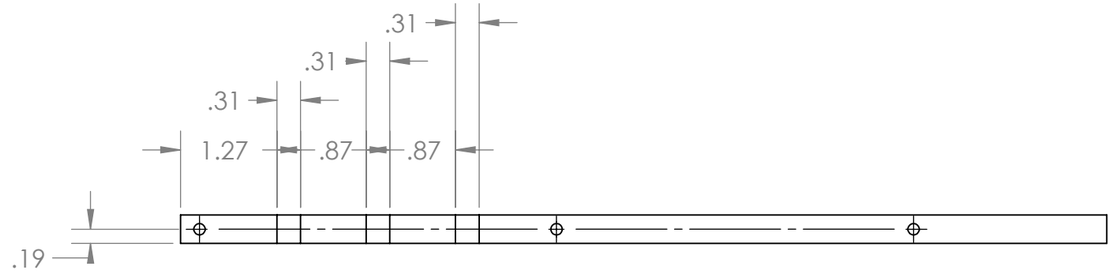

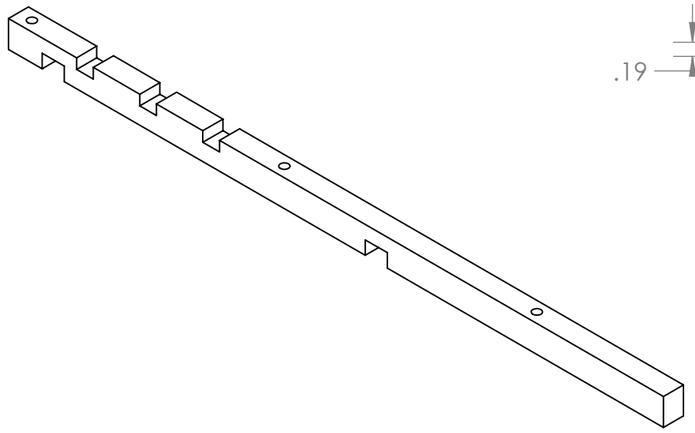

DWG NOTES: (UNLESS OTHERWISE NOTED)
1) ALL UNITS: INCHES
2) Use available material

MATERIAL: Lexan

TOLERANCES (UNLESS NOTED)

DECIMAL: X.X : ±0.015
X.XX : ±0.01
X.XXX : ±0.005

FRACTIONAL: ±1/32

NO. PARTS REQ'D: 2

RENSSELAER POLYTECHNIC INSTITUTE

Lower Base Feeder Tray

DRAWN BY: Michael Snyder/Wesley Koo

E-MAIL: koow@rpi.edu **PHONE:** 650-804-4515

FACULTY ADVISOR: Samuel Chiappone **CHECKED: (INITIALS)**

SIZE **B** **COURSE NAME/NUMBER:** MP&S A Team SECTION A

DATE: Friday, March 15, 2013 8:42:20 PM

SCALE 1:2 CAD FILE: I:\Candy\A_LowerBaseFDTray\1035_AF1035_040223 SHEET 9 OF 9

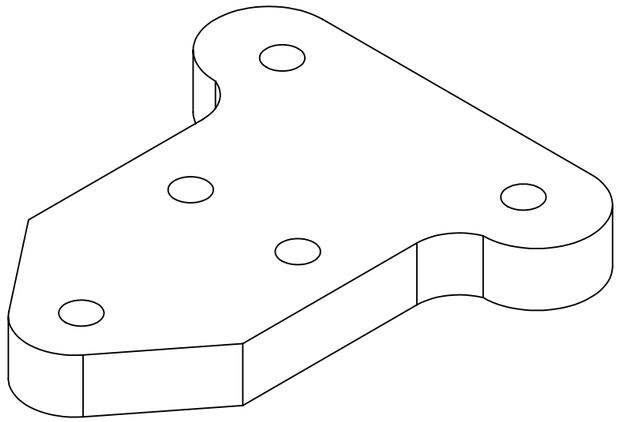

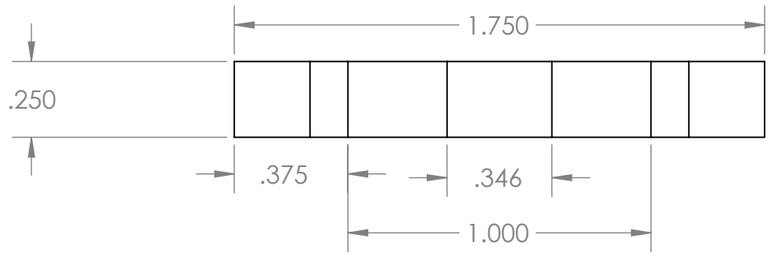

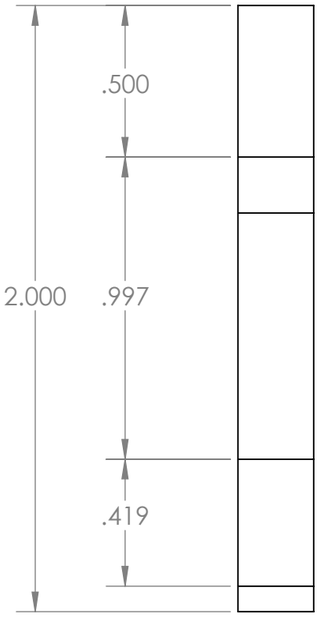

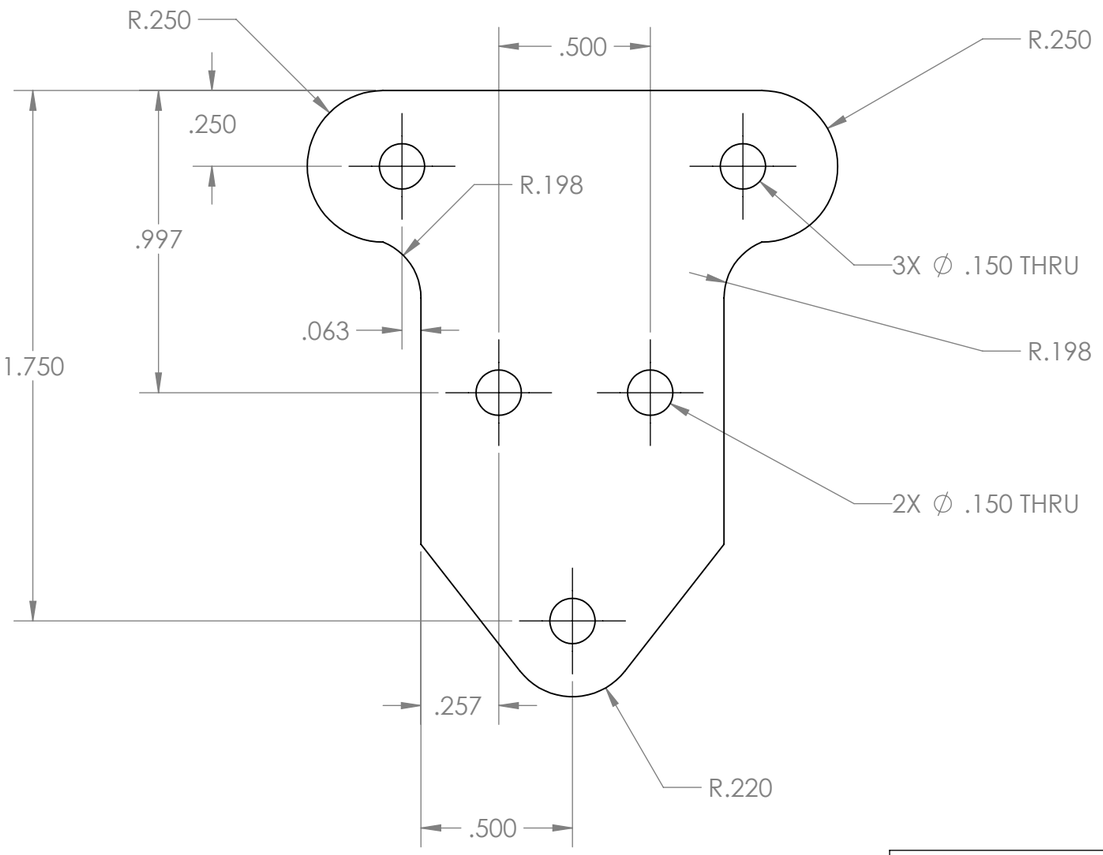

DWG NOTES: (UNLESS OTHERWISE NOTED)

1) ALL UNITS: INCHES
2) Part already exists, but we are adjusting the 2X @ 0.150 holes.

MATERIAL: Aluminium

TOLERANCES (UNLESS NOTED)

DECIMAL: X.X : ±0.015
X.XX : ±0.01
X.XXX : ±0.005

FRACTIONAL: ±1/32

NO. PARTS REQ'D: 1

RENSSELAER POLYTECHNIC INSTITUTE

Pneumatic Rotary End Effector Plate

DRAWN BY: Michael Snyder/Wesley Koo

E-MAIL: koow@rpi.edu **PHONE:** 650-804-4515

FACULTY ADVISOR: Samuel Chiappone **CHECKED: (INITIALS)**

SIZE B | **COURSE NAME/NUMBER:** MP&S A Team | SECTION A

DATE: Monday, February 25, 2013 3:59:03 PM

SCALE 2:1 | CAD FILE: 12CandyA_PneuRotaryPlate1021_AS1021_030220 | SHEET 1 OF 1

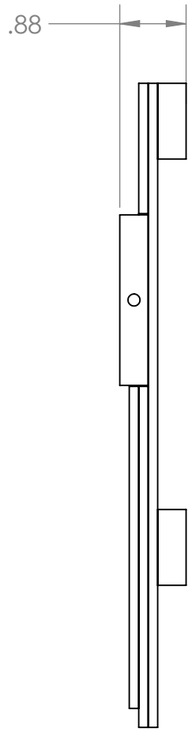

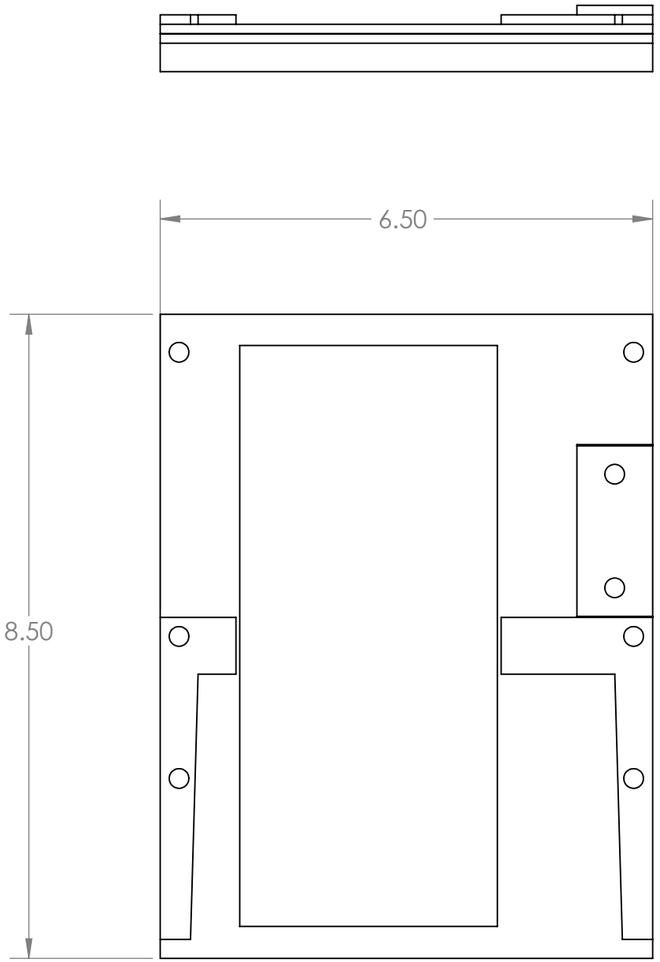

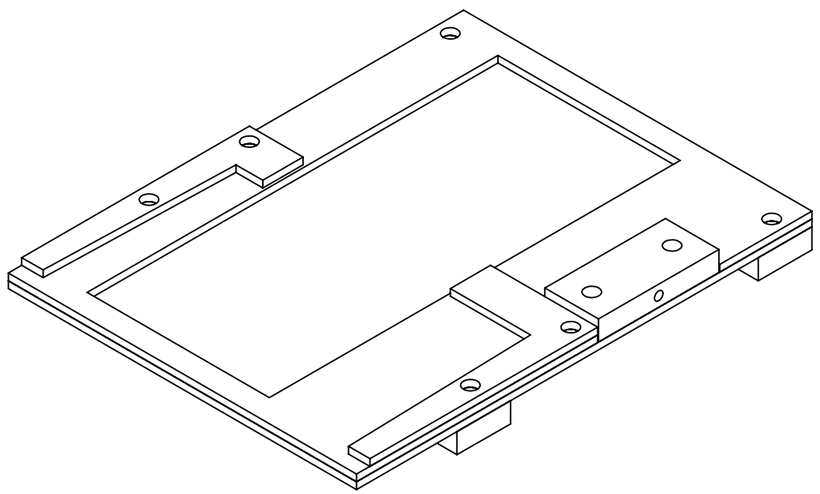

DWG NOTES: (UNLESS OTHERWISE NOTED)

1) ALL UNITS: INCHES
2) Use available material.

MATERIAL: Lexan

TOLERANCES (UNLESS NOTED)

DECIMAL: X.X : ±0.015, X.XX : ±0.01, X.XXX : ±0.005

FRACTIONAL: ±1/32

NO. PARTS REQ'D: 1

RENSSELAER POLYTECHNIC INSTITUTE

Sliding Base Fixture Assembly

DRAWN BY: Michael Snyder/Wesley Koo

E-MAIL: koow@rpi.edu **PHONE:** 650-804-4515

FACULTY ADVISOR: Samuel Chiappone **CHECKED: (INITIALS)**

SIZE B | **COURSE NAME/NUMBER:** MP&S A Team | SECTION A

DATE: Thursday, March 07, 2013 4:25:33 PM

SCALE 1:2 | CAD FILE: 12CandyA_SlidingBaseFIX1060_AF1060_030223 | SHEET 1 OF 8

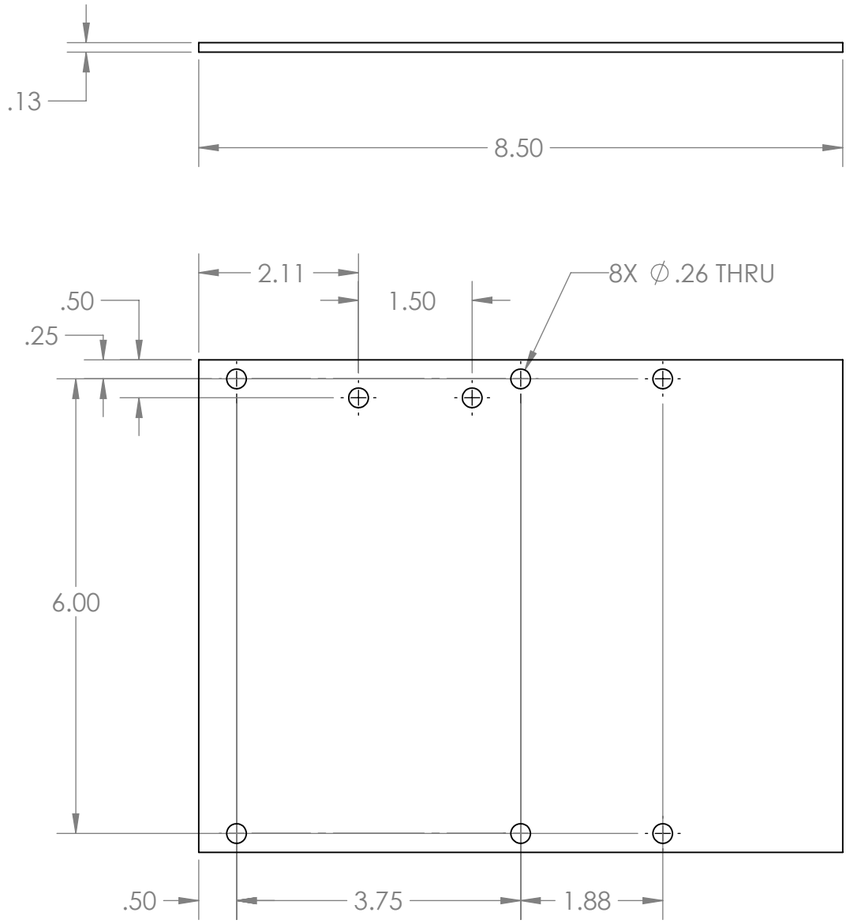

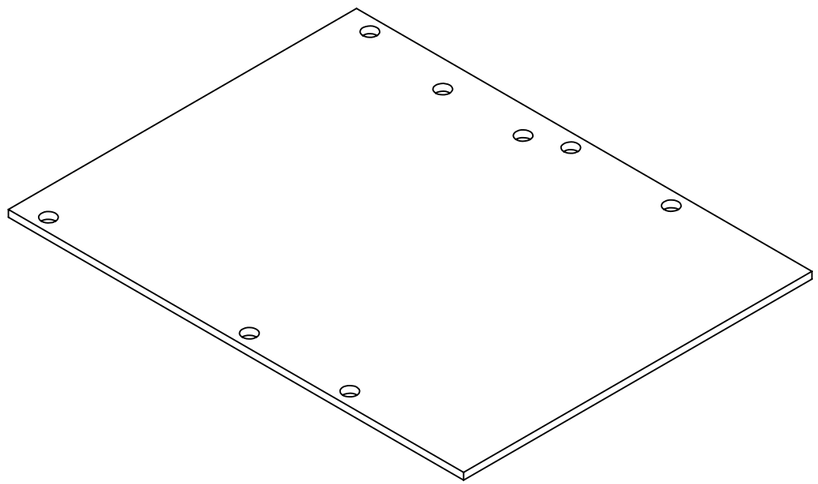

DWG NOTES: (UNLESS OTHERWISE NOTED)
1) ALL UNITS: INCHES
2) Use available material.

MATERIAL: Lexan

TOLERANCES (UNLESS NOTED)

DECIMAL: X.X : ±0.015, X.XX : ±0.01, X.XXX : ±0.005

FRACTIONAL: ±1/32

NO. PARTS REQ'D: 1

RENSSELAER POLYTECHNIC INSTITUTE

Sliding Base Fixture
Bottom Plate

DRAWN BY: Michael Snyder/Wesley Koo

E-MAIL: koow@rpi.edu **PHONE:** 650-804-4515

FACULTY ADVISOR: Samuel Chiappone **CHECKED: (INITIALS)**

SIZE B | **COURSE NAME/NUMBER:** MP&S A Team | SECTION A

DATE: Thursday, March 07, 2013 4:25:33 PM

SCALE 1:2 | CAD FILE: 13CandyA_SlidingBaseFXBottom1061_AF1061_030223 | SHEET 2 OF 8

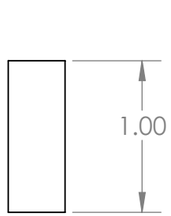

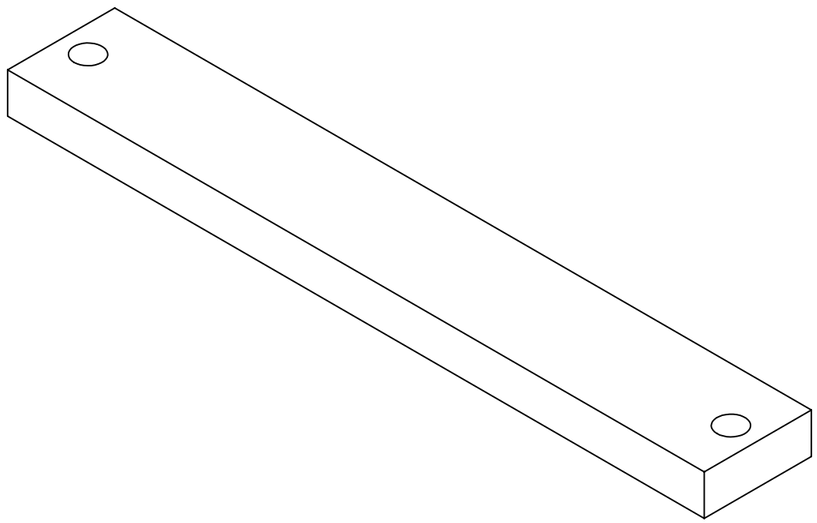

DWG NOTES: (UNLESS OTHERWISE NOTED)
1) ALL UNITS: INCHES
2) Use Material Available

MATERIAL: Lexan

TOLERANCES (UNLESS NOTED)

DECIMAL: X.X : ±0.015
X.XX : ±0.01
X.XXX : ±0.005

FRACTIONAL: ±1/32

NO. PARTS REQ'D: 2

RENSSELAER POLYTECHNIC INSTITUTE

Sliding Base Fixture
Glide

DRAWN BY: Michael Snyder/Wesley Koo

E-MAIL: koow@rpi.edu **PHONE:** 650-804-4515

FACULTY ADVISOR: Samuel Chiappone **CHECKED: (INITIALS)**

SIZE **B** **COURSE NAME/NUMBER:** MP&S A Team SECTION A
DATE: Thursday, March 07, 2013 4:25:33 PM

SCALE 1:1 CAD FILE: 12CandyA_SlidingBaseFXGlide1062_AF1062_030223 SHEET 3 OF 8

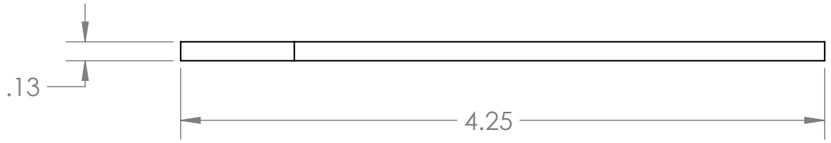

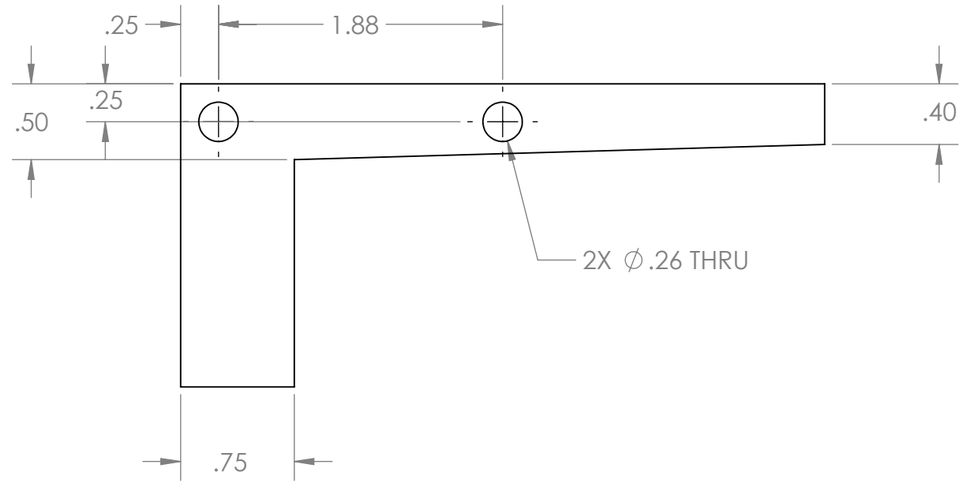

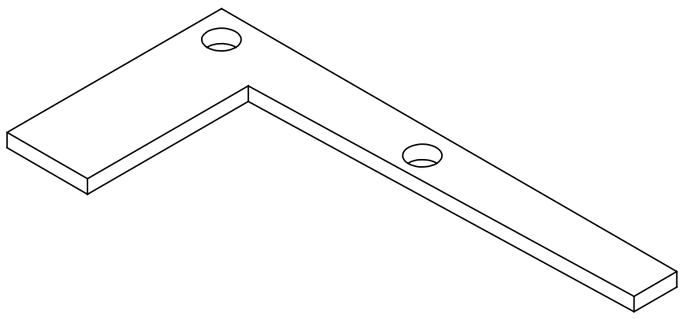

DWG NOTES: (UNLESS OTHERWISE NOTED)
1) ALL UNITS: INCHES
2) Use Available Material

MATERIAL: Lexan

TOLERANCES (UNLESS NOTED)

DECIMAL: X.X : ±0.015
X.XX : ±0.01
X.XXX : ±0.005

FRACTIONAL: ±1/32

NO. PARTS REQ'D: 1

RENSSELAER POLYTECHNIC INSTITUTE

Sliding Base Fixture
Guide 1

DRAWN BY: Michael Snyder/Wesley Koo
E-MAIL: koow@rpi.edu **PHONE:** 650-804-4515
FACULTY ADVISOR: Samuel Chiappone **CHECKED: (INITIALS)**
SIZE B | **COURSE NAME/NUMBER:** MP&S A Team | SECTION A
DATE: Thursday, March 07, 2013 4:25:33 PM
SCALE 1:1 | CAD FILE: 12CandyA_SlidingBaseFXGuide1063_AF1063_030223 | SHEET 4 OF 8

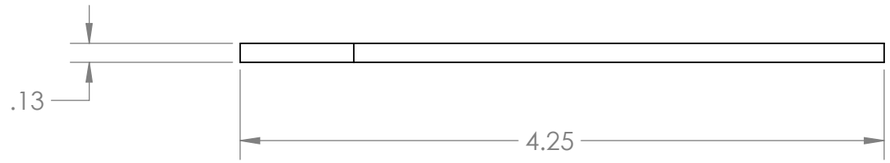

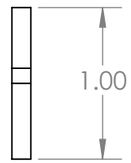

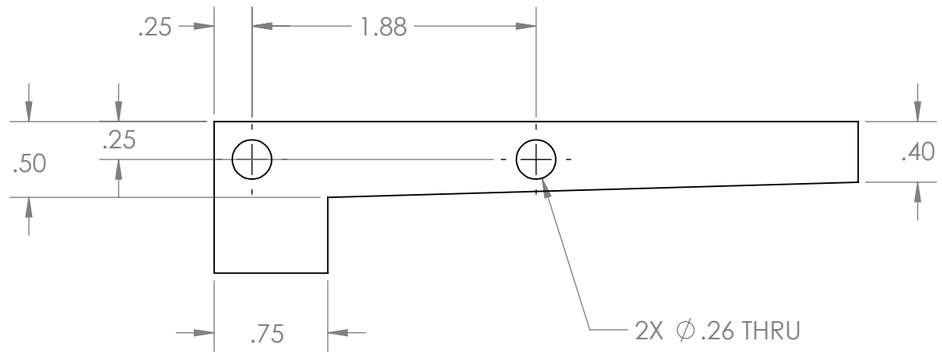

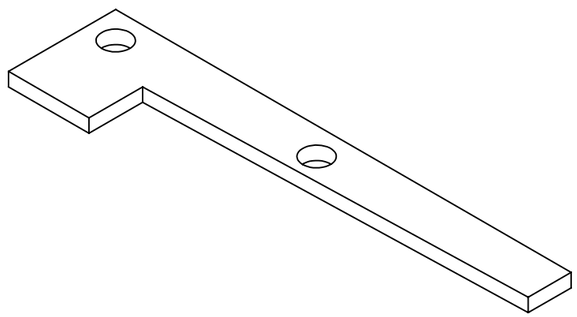

DWG NOTES: (UNLESS OTHERWISE NOTED)
1) ALL UNITS: INCHES
2) Use Available Material

MATERIAL: Lexan

TOLERANCES (UNLESS NOTED)

DECIMAL: X.X : ±0.015, X.XX : ±0.01, X.XXX : ±0.005

FRACTIONAL: ±1/32

NO. PARTS REQ'D: 1

RENSSELAER POLYTECHNIC INSTITUTE

Sliding Base Fixture
Guide 2

DRAWN BY: Michael Snyder/Wesley Koo

E-MAIL: koow@rpi.edu **PHONE:** 650-804-4515

FACULTY ADVISOR: Samuel Chiappone **CHECKED: (INITIALS)**

SIZE **B** **COURSE NAME/NUMBER:** MP&S A Team SECTION A

DATE: Thursday, March 07, 2013 4:25:33 PM

SCALE 1:1 CAD FILE: I:2CandyA_SlidingBaseFXGuide1064_AF1064_030223 SHEET 5 OF 8

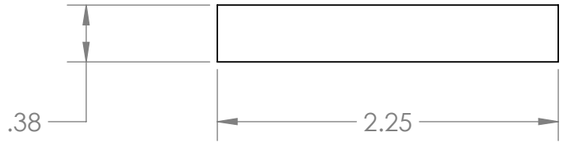

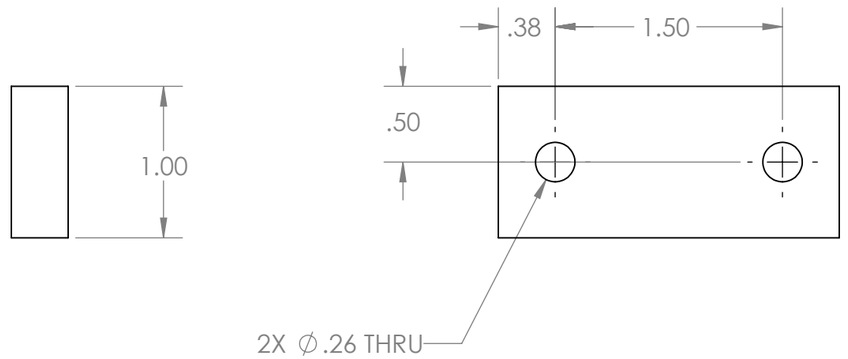

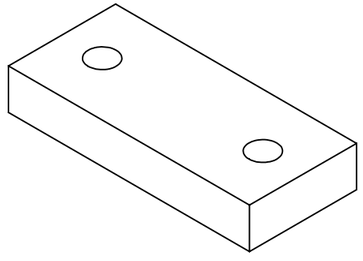

DWG NOTES: (UNLESS OTHERWISE NOTED)
1) ALL UNITS: INCHES
2) Use available material

MATERIAL: Lexan

TOLERANCES (UNLESS NOTED)

DECIMAL: X.X : ±0.015
X.XX : ±0.01
X.XXX : ±0.005

FRACTIONAL: ±1/32

NO. PARTS REQ'D: 1

RENSSELAER POLYTECHNIC INSTITUTE

Sliding Base Fixture Stand

DRAWN BY: Michael Snyder/Wesley Koo

E-MAIL: koow@rpi.edu **PHONE:** 650-804-4515

FACULTY ADVISOR: Samuel Chiappone **CHECKED: (INITIALS)**

SIZE **B** **COURSE NAME/NUMBER:** MP&S A Team SECTION A

DATE: Thursday, March 07, 2013 4:25:33 PM

SCALE 1:1 CAD FILE: 12CandyA_SlidingBaseFXStand1065_AF1065_030223 SHEET 6 OF 8

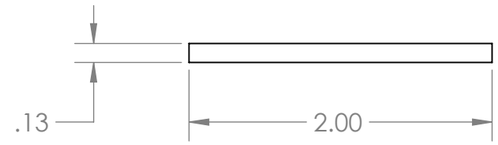

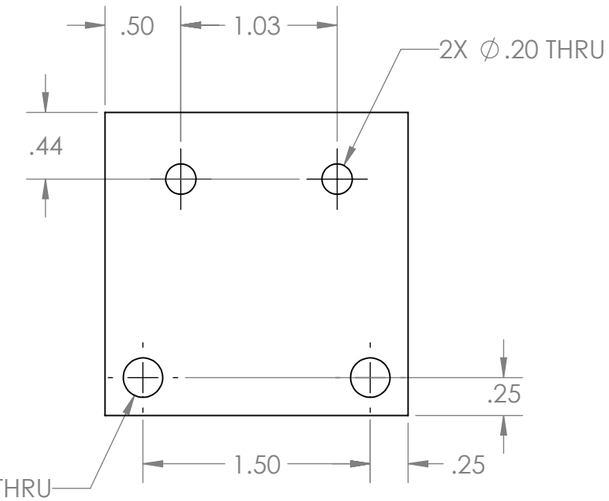

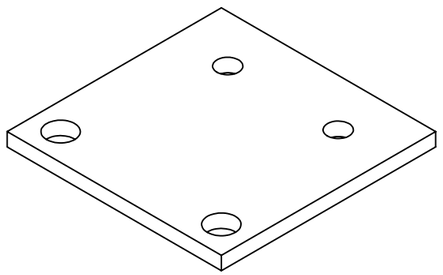

DWG NOTES: (UNLESS OTHERWISE NOTED)
1) ALL UNITS: INCHES
2) Use available material

MATERIAL: Lexan

TOLERANCES (UNLESS NOTED)

DECIMAL: X.X : ±0.015, X.XX : ±0.01, X.XXX : ±0.005

FRACTIONAL: ±1/32

NO. PARTS REQ'D: 1

RENSSELAER POLYTECHNIC INSTITUTE

Sliding Base Fixture
Stand 2

DRAWN BY: Michael Snyder/Wesley Koo
E-MAIL: koow@rpi.edu **PHONE:** 650-804-4515
FACULTY ADVISOR: Samuel Chiappone **CHECKED: (INITIALS)**

SIZE B | **COURSE NAME/NUMBER:** MP&S A Team | SECTION A
DATE: Thursday, March 07, 2013 4:25:33 PM
SCALE 1:1 | CAD FILE: 12CandyA_SlidingBaseFXStand1066_AF1066_030223 | SHEET 7 OF 8

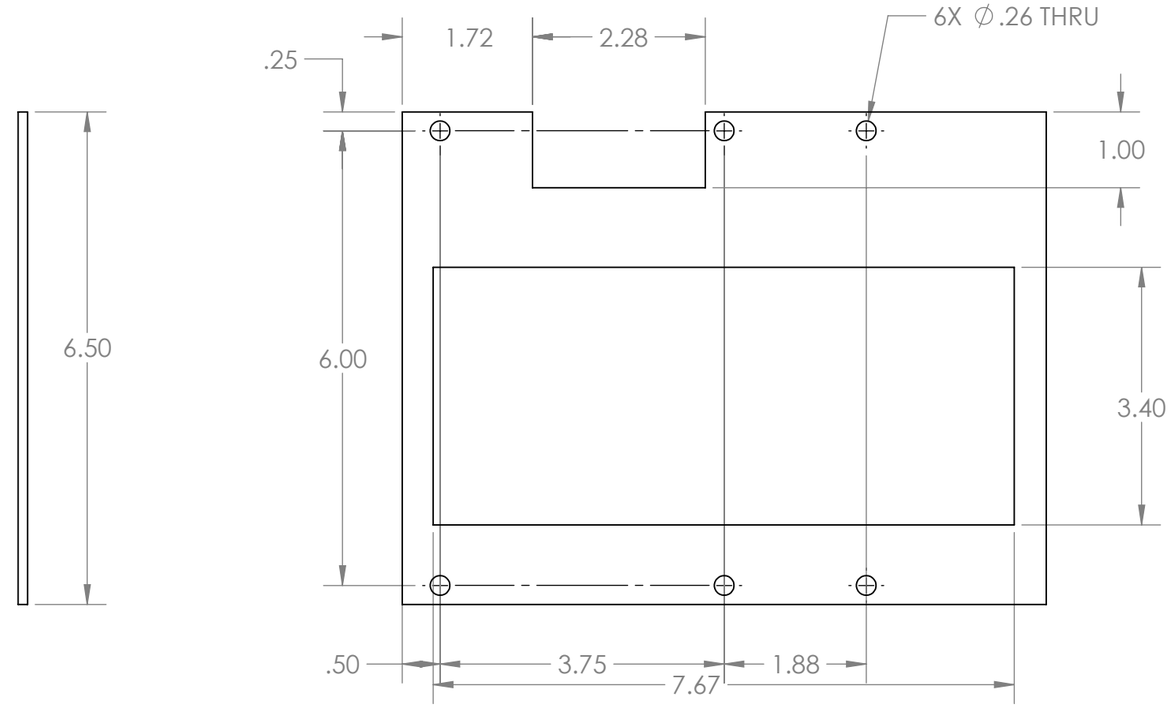

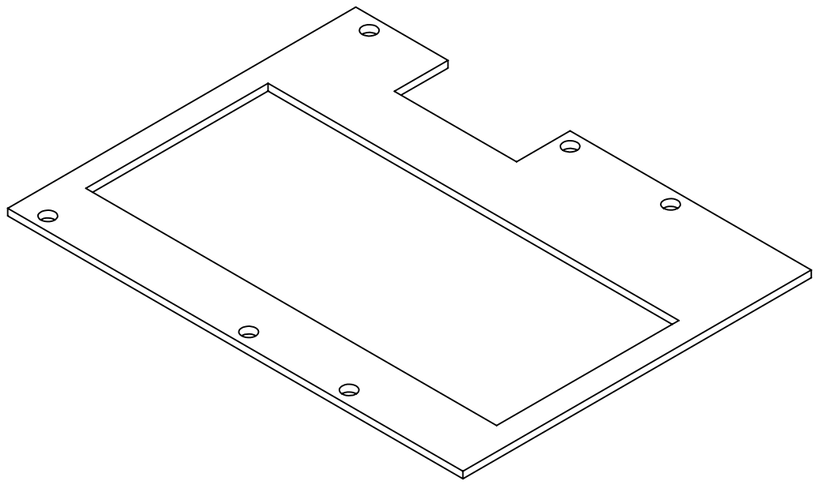

DWG NOTES: (UNLESS OTHERWISE NOTED)
1) ALL UNITS: INCHES
2) Use available material

MATERIAL: Lexan

TOLERANCES (UNLESS NOTED)

DECIMAL: X.X : ±0.015
X.XX : ±0.01
X.XXX : ±0.005

FRACTIONAL: ±1/32

NO. PARTS REQ'D: 1

RENSSELAER POLYTECHNIC INSTITUTE

Sliding Base Fixture Top

DRAWN BY: Michael Snyder/Wesley Koo

E-MAIL: koow@rpi.edu **PHONE:** 650-804-4515

FACULTY ADVISOR: Samuel Chiappone **CHECKED: (INITIALS)**

SIZE **B** | **COURSE NAME/NUMBER:** MP&S A Team | **DATE:** Thursday, March 07, 2013 4:25:33 PM | SECTION A

SCALE 1:2 | CAD FILE: I:\2Candy\A_SlidingBaseFixTop10x7_AF10x7_030223 | SHEET 8 OF 8

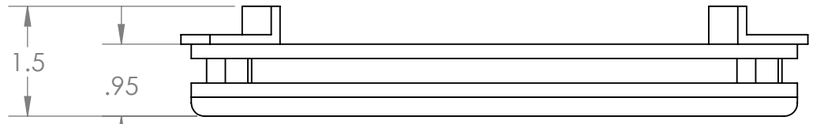

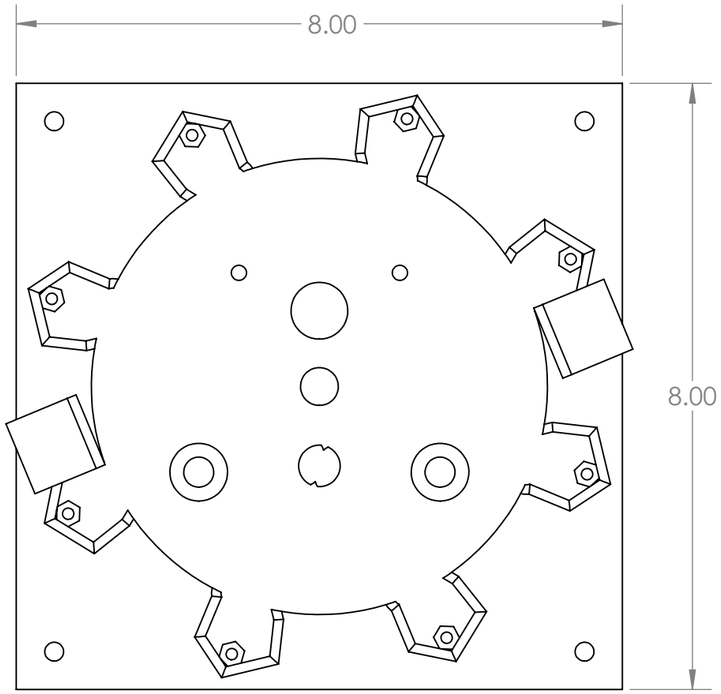

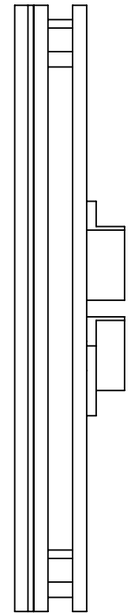

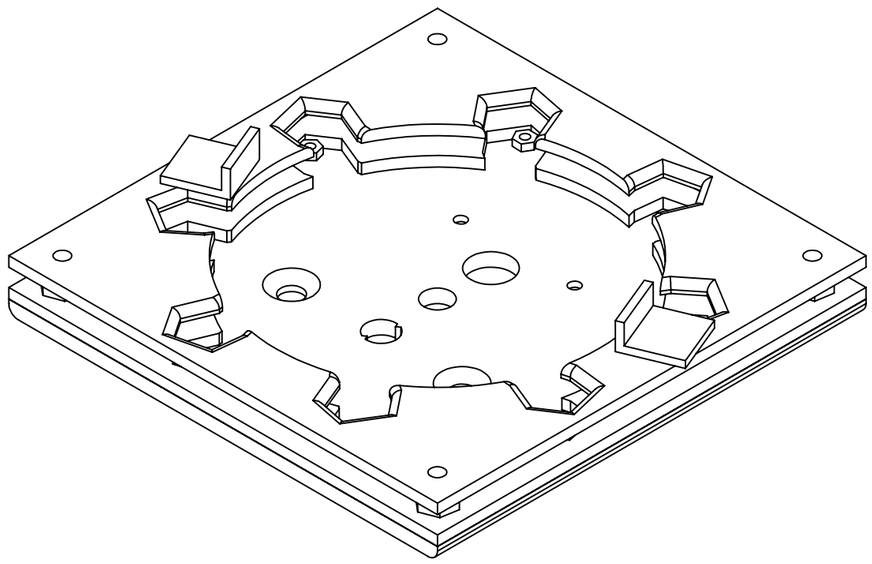

DWG NOTES: (UNLESS OTHERWISE NOTED)
1) ALL UNITS: INCHES
2) < FILL IN NOTES HERE >

MATERIAL: ABS, Aluminium

TOLERANCES (UNLESS NOTED)

DECIMAL: X.X : ±0.015
X.XX : ±0.01
X.XXX : ±0.005

FRACTIONAL: ±1/32

NO. PARTS REQ'D: 1

RENSSELAER POLYTECHNIC INSTITUTE

Sliding Wheel Fixture

DRAWN BY: Daniel Golding/Wesley Koo

E-MAIL: koow@rpi.edu **PHONE:** 650-804-4515

FACULTY ADVISOR: Samuel Chiappone **CHECKED: (INITIALS)**

SIZE **B** **COURSE NAME/NUMBER:** MP&S A Team SECTION A

DATE: Wednesday, May 01, 2013 6:56:42 AM

SCALE 1:2 CAD FILE: 12CandyA_SlidingWheelFX1150_AF1150_020428 SHEET 1 OF 7

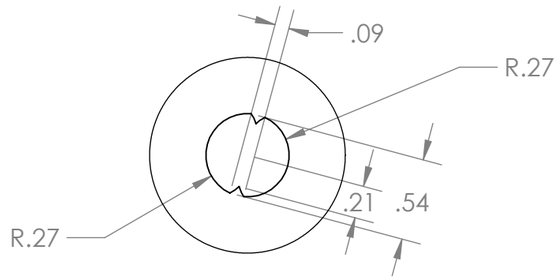

DETAIL A
SCALE 1 : 1

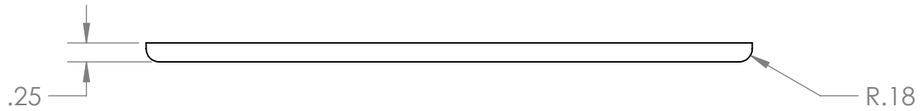

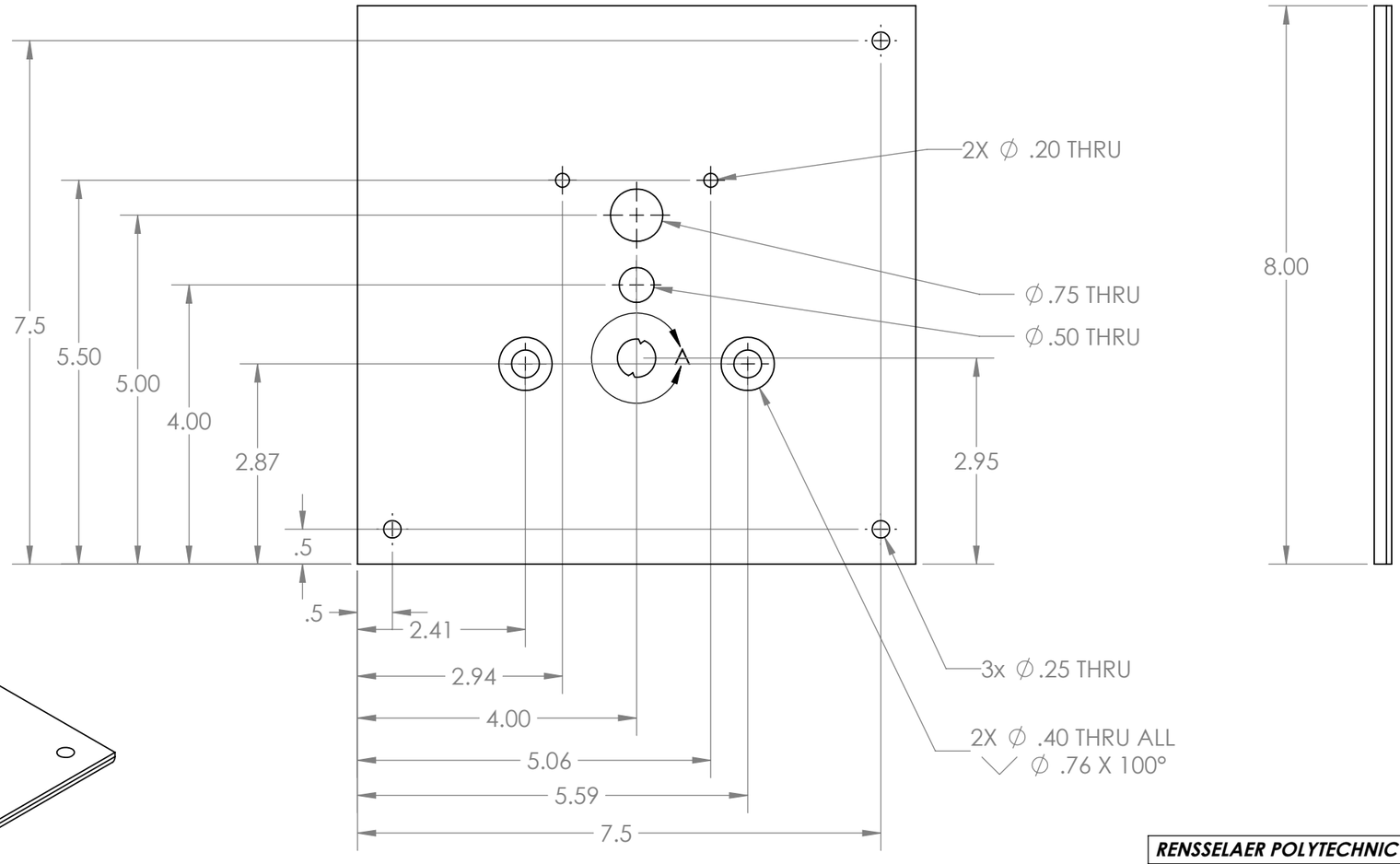

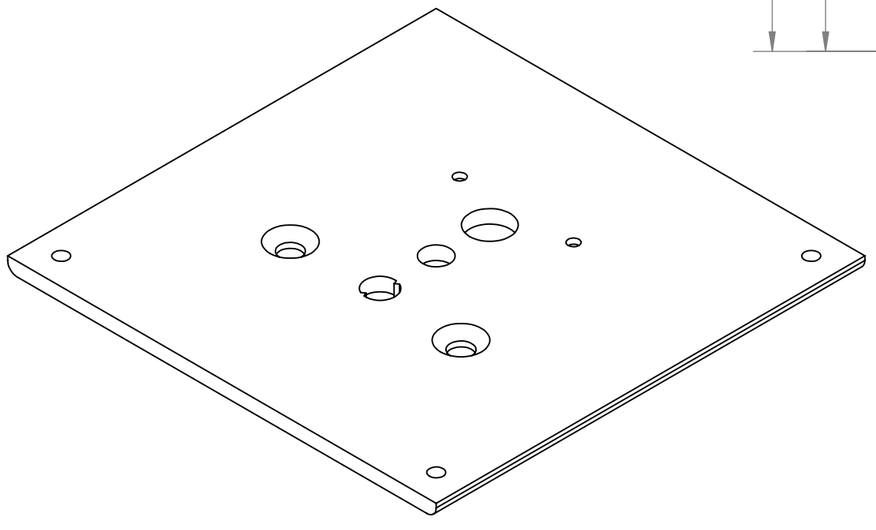

DWG NOTES: (UNLESS OTHERWISE NOTED)

1) ALL UNITS: INCHES
2) The indents in the hole in view A is not used.
3) Part will be waterjet

MATERIAL: Aluminium

TOLERANCES (UNLESS NOTED)

DECIMAL: X.X : ±0.015
X.XX : ±0.01
X.XXX : ±0.005

FRACTIONAL: ±1/32

NO. PARTS REQ'D: 1

RENSSELAER POLYTECHNIC INSTITUTE

Sliding Wheel Fixture
Gear Locator Plate

DRAWN BY: Daniel Golding/Wesley Koo

E-MAIL: koow@rpi.edu **PHONE:** 650-804-4515

FACULTY ADVISOR: Samuel Chiappone **CHECKED: (INITIALS)**

SIZE **B** **COURSE NAME/NUMBER:** MP&S A Team SECTION A

DATE: Wednesday, May 01, 2013 6:56:42 AM

SCALE 1:2 CAD FILE: 12CandyA_SlidingWheelFXGearPlate1151_AF1151_020428 SHEET 2 OF 7

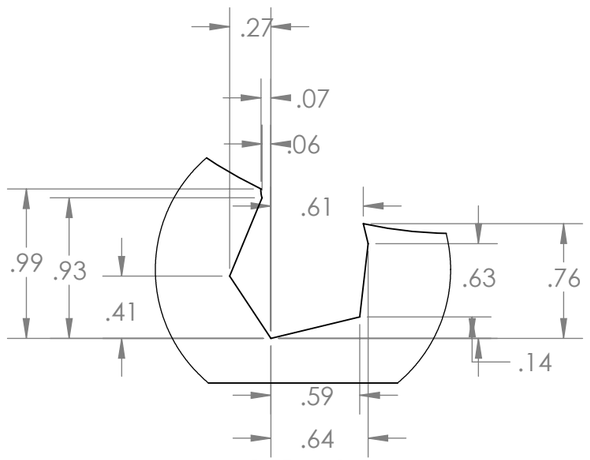

DETAIL B
SCALE 1 : 1

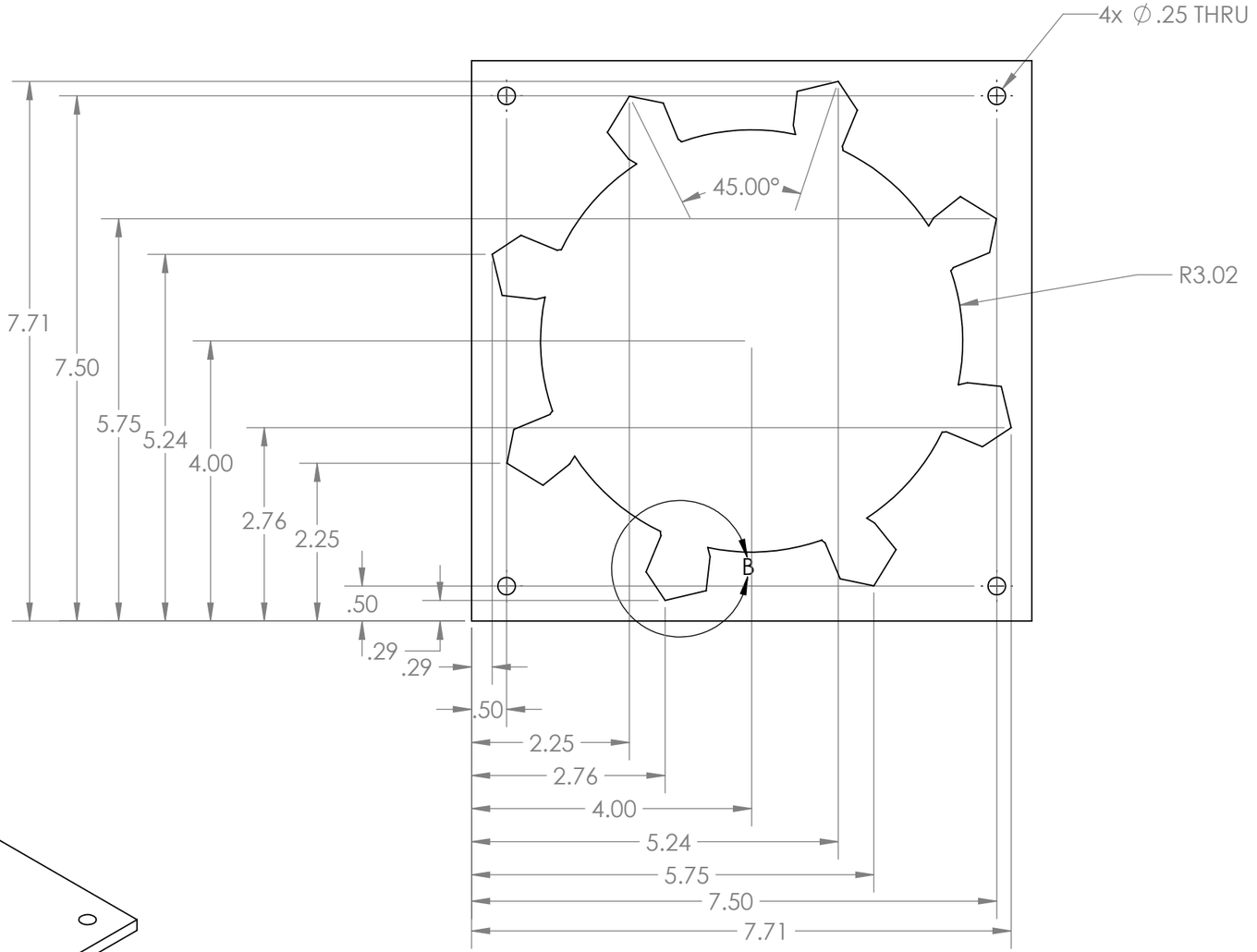

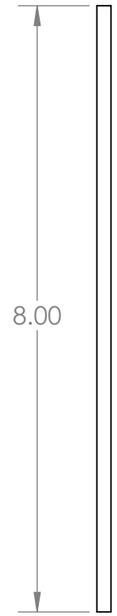

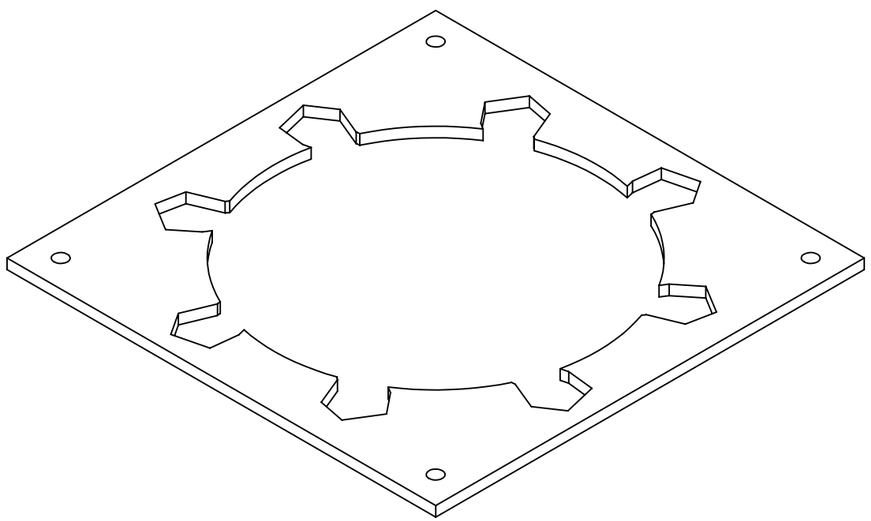

DWG NOTES: (UNLESS OTHERWISE NOTED)

1) ALL UNITS: INCHES
2) All 8 locations have the same dimensions as view B
3) Part will be waterjet
4) Each location is 45 deg from the next

MATERIAL: ABS

TOLERANCES (UNLESS NOTED)

DECIMAL: X.X : ±0.015, X.XX : ±0.01, X.XXX : ±0.005

FRACTIONAL: ±1/32

NO. PARTS REQ'D: 1

RENSSELAER POLYTECHNIC INSTITUTE

Sliding Wheel Fixture
Lower Brace

DRAWN BY: Daniel Golding/Wesley Koo

E-MAIL: koow@rpi.edu **PHONE:** 650-804-4515

FACULTY ADVISOR: Samuel Chiappone **CHECKED: (INITIALS)**

SIZE B | **COURSE NAME/NUMBER:** MP&S A Team | SECTION A

DATE: Wednesday, May 01, 2013 6:56:42 AM

SCALE 1:2 | CAD FILE: 12CandyA_SlidingWheelFixLowerBrace1152_AF1152_020403 | SHEET 3 OF 7

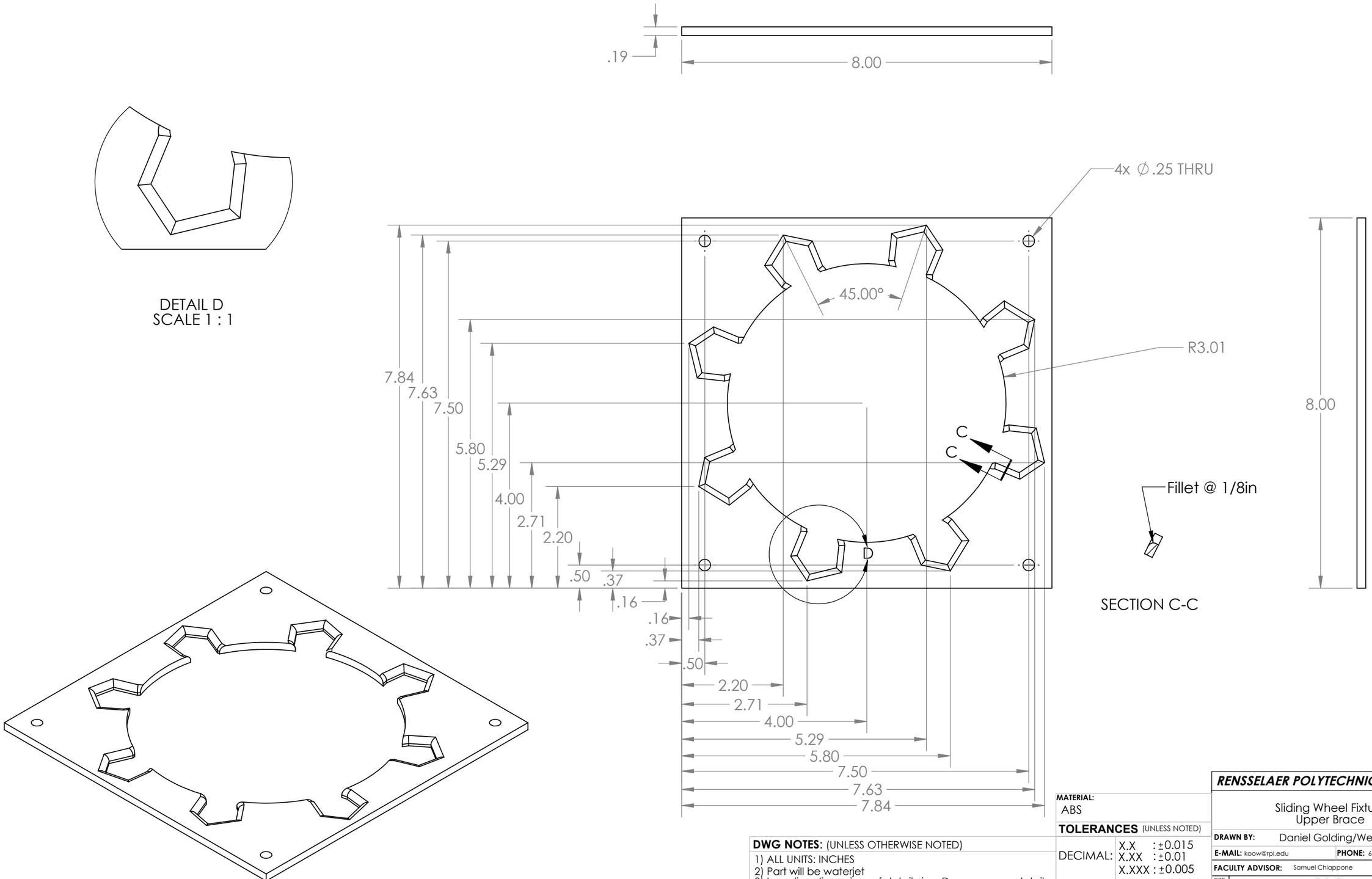

DWG NOTES: (UNLESS OTHERWISE NOTED)

1) ALL UNITS: INCHES
2) Part will be waterjet
3) Inner line dimensions of detail view D are same as detail view B
4) Cart locations are same as Lower Brace (AF1152)

MATERIAL: ABS

TOLERANCES (UNLESS NOTED)

DECIMAL: X.X : ±0.015, X.XX : ±0.01, X.XXX : ±0.005

FRACTIONAL: ±1/32

NO. PARTS REQ'D: 1

RENSSELAER POLYTECHNIC INSTITUTE

Sliding Wheel Fixture
Upper Brace

DRAWN BY: Daniel Golding/Wesley Koo

E-MAIL: koow@rpi.edu **PHONE:** 650-804-4515

FACULTY ADVISOR: Samuel Chiappone **CHECKED: (INITIALS)**

SIZE **B** **COURSE NAME/NUMBER:** MP&S A Team **SECTION** A

DATE: Wednesday, May 01, 2013 6:56:42 AM

SCALE 1:2 CAD FILE: 12CandyA_SlidingWheelFXUpperBrace1153_AF1153_020428 SHEET 4 OF 7

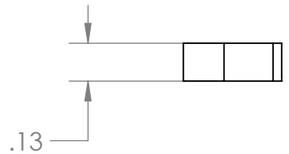

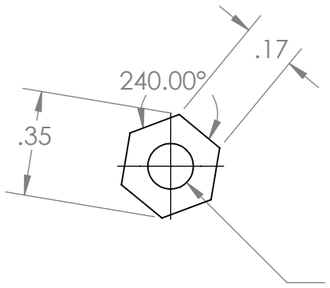

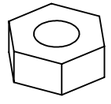

DWG NOTES: (UNLESS OTHERWISE NOTED)

1) ALL UNITS: INCHES
2) Part is a standard nut
3) All sides are identical

MATERIAL: Steel

TOLERANCES (UNLESS NOTED)

DECIMAL: X.X : ±0.015
X.XX : ±0.01
X.XXX : ±0.005

FRACTIONAL: ±1/32

NO. PARTS REQ'D: 8

RENSSELAER POLYTECHNIC INSTITUTE

Sliding Wheel Fixture
Small Spacer

DRAWN BY: Daniel Golding/Wesley Koo

E-MAIL: koow@rpi.edu **PHONE:** 650-804-4515

FACULTY ADVISOR: Samuel Chiappone **CHECKED: (INITIALS)**

SIZE **B** | **COURSE NAME/NUMBER:** MP&S A Team | SECTION A

DATE: Wednesday, May 01, 2013 6:56:42 AM

SCALE 2:1 | CAD FILE: 12CandyA_SlidingWheelFIXSmallSpacer1154_AF1154_01040a | SHEET 5 OF 7

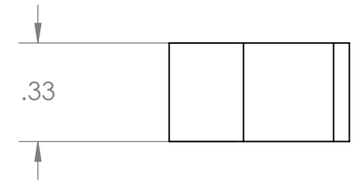

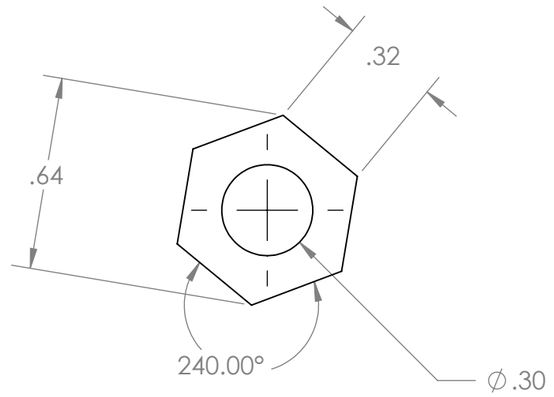

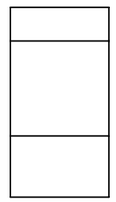

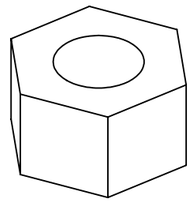

DWG NOTES: (UNLESS OTHERWISE NOTED)

1) ALL UNITS: INCHES
2) Part is a standard washer
3) All sides are identical

MATERIAL: Steel

TOLERANCES (UNLESS NOTED)

DECIMAL:	X.X	: ±0.015
	X.XX	: ±0.01
	X.XXX	: ±0.005

FRACTIONAL: ±1/32

NO. PARTS REQ'D: 4

RENSSELAER POLYTECHNIC INSTITUTE

Sliding Wheel Fixture
Large Spacer

DRAWN BY: Daniel Golding/Wesley Koo

E-MAIL: koow@rpi.edu **PHONE:** 650-804-4515

FACULTY ADVISOR: Samuel Chiappone **CHECKED: (INITIALS)**

SIZE **B** | **COURSE NAME/NUMBER:** MP&S A Team | SECTION A

DATE: Wednesday, May 01, 2013 6:56:42 AM

SCALE 2:1 | CAD FILE: 12CandyA_SlidingWheelFixLargeSpacer1155_AF1155_01042013 | SHEET 6 OF 7

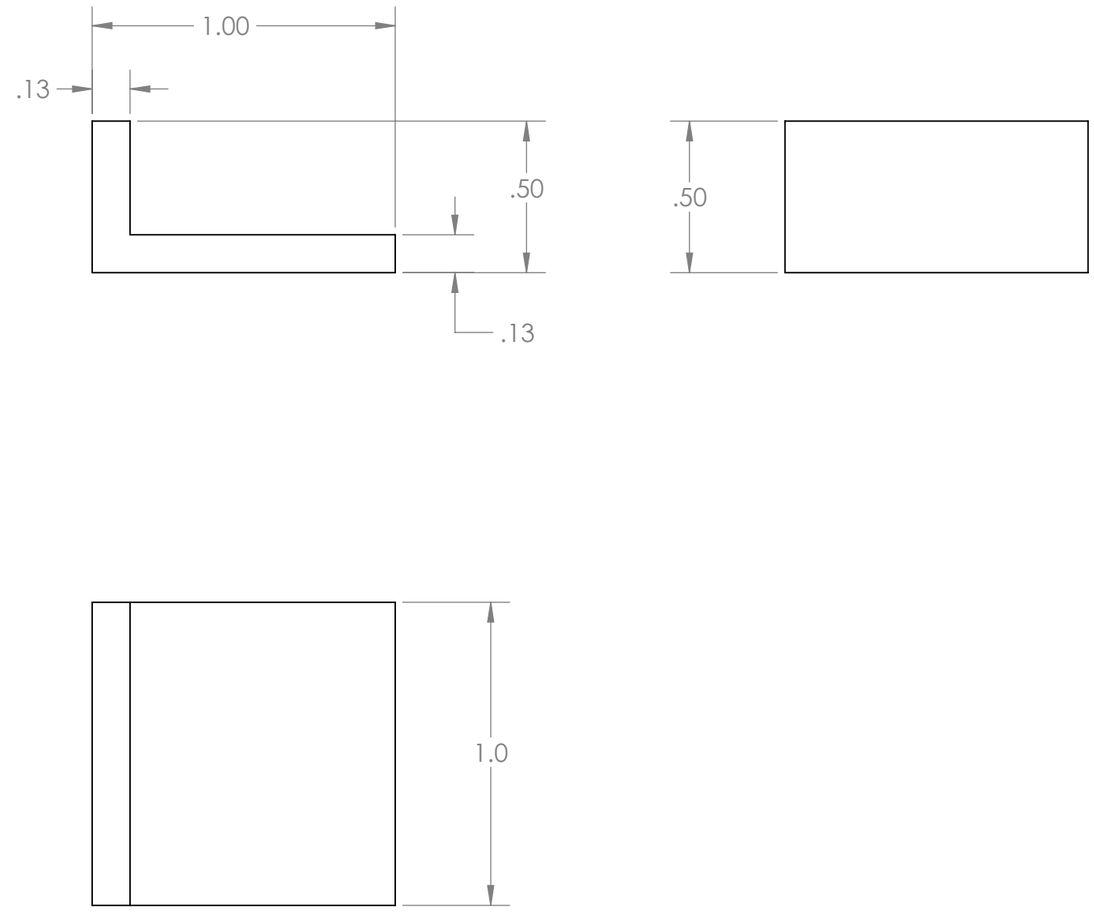

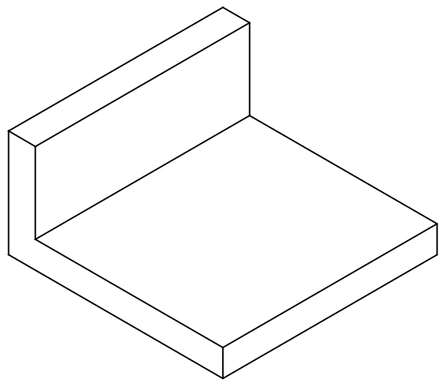

DWG NOTES: (UNLESS OTHERWISE NOTED)
1) ALL UNITS: INCHES

MATERIAL: Aluminium

TOLERANCES (UNLESS NOTED)

DECIMAL: X.X : ±0.015
X.XX : ±0.01
X.XXX : ±0.005

FRACTIONAL: ±1/32

NO. PARTS REQ'D: 2

RENSSELAER POLYTECHNIC INSTITUTE

Sliding Wheel Fixture
L-Bracket

DRAWN BY: Daniel Golding/Wesley Koo

E-MAIL: koow@rpi.edu **PHONE:** 650-804-4515

FACULTY ADVISOR: Samuel Chiappone **CHECKED: (INITIALS)**

SIZE **B** | **COURSE NAME/NUMBER:** MP&S A Team | SECTION A

DATE: Wednesday, May 01, 2013 6:56:42 AM

SCALE 2:1 | CAD FILE: 12CandyA_SlidingWheelFXLBracket1156_AF1156_020428 | SHEET 7 OF 7

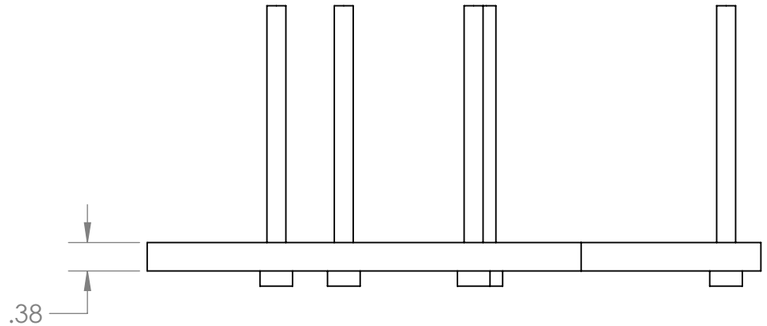

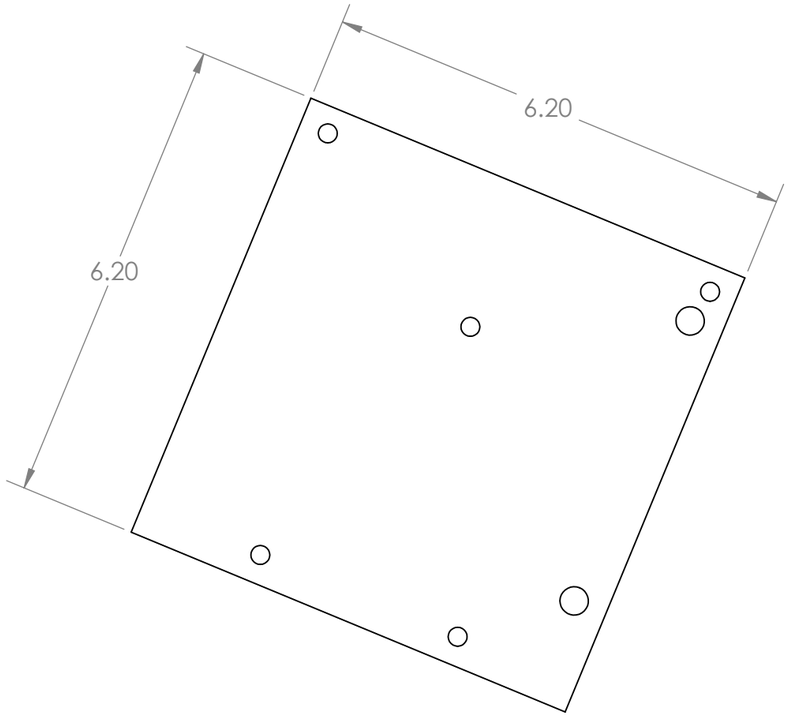

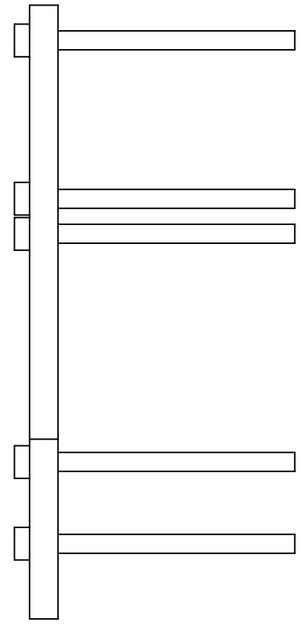

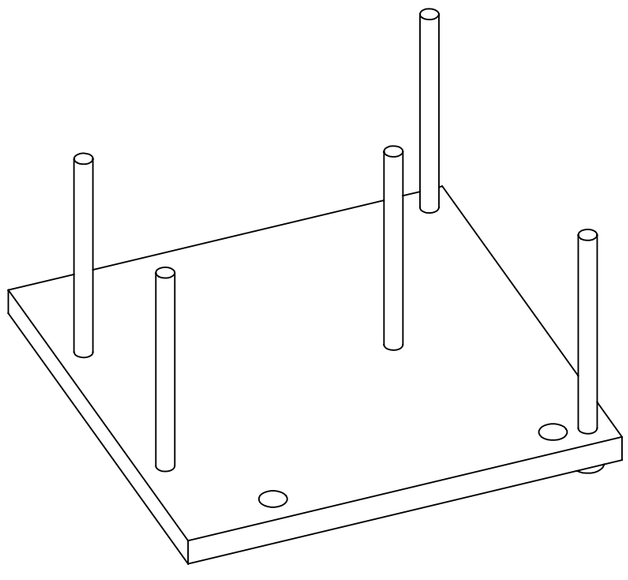

DWG NOTES: (UNLESS OTHERWISE NOTED)
1) ALL UNITS: INCHES

MATERIAL: ABS/Aluminium

TOLERANCES (UNLESS NOTED)

DECIMAL: X.X : ±0.015
X.XX : ±0.01
X.XXX : ±0.005

FRACTIONAL: ±1/32

NO. PARTS REQ'D: 2

RENSSELAER POLYTECHNIC INSTITUTE

Strut Stack

DRAWN BY: Daniel Golding/Wesley Koo

E-MAIL: koow@rpi.edu **PHONE:** 650-804-4515

FACULTY ADVISOR: Samuel Chiappone **CHECKED: (INITIALS)**

SIZE **B** | **COURSE NAME/NUMBER:** MP&S A Team | SECTION A

DATE: Wednesday, May 01, 2013 8:00:28 AM

SCALE 1:2 | CAD FILE: 12CandyA_StrutStack1140_AF1140_010328 | SHEET 1 OF 3

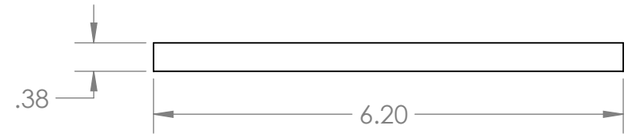

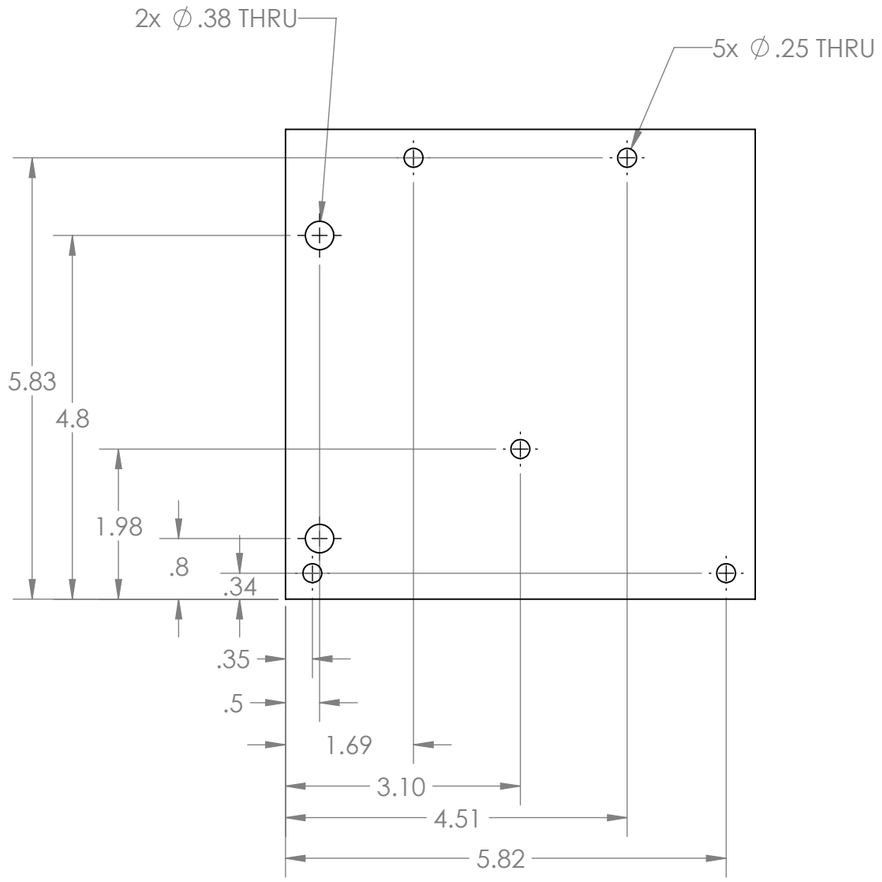

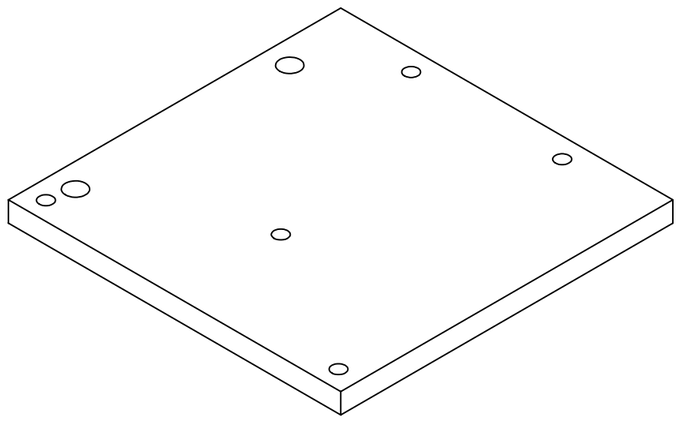

DWG NOTES: (UNLESS OTHERWISE NOTED)
1) ALL UNITS: INCHES

MATERIAL: ABS

TOLERANCES (UNLESS NOTED)

DECIMAL: X.X : ±0.015, X.XX : ±0.01, X.XXX : ±0.005

FRACTIONAL: ±1/32

NO. PARTS REQ'D: 2

RENSSELAER POLYTECHNIC INSTITUTE

Strut Stack Base

DRAWN BY: Daniel Golding/Wesley Koo

E-MAIL: koow@rpi.edu **PHONE:** 650-804-4515

FACULTY ADVISOR: Samuel Chiappone **CHECKED: (INITIALS)**

SIZE **B** **COURSE NAME/NUMBER:** MP&S A Team SECTION A

DATE: Wednesday, May 01, 2013 8:00:28 AM

SCALE 1:2 CAD FILE: I2CandyA_StrutStackBase1141_AF1141_010328 SHEET 2 OF 3

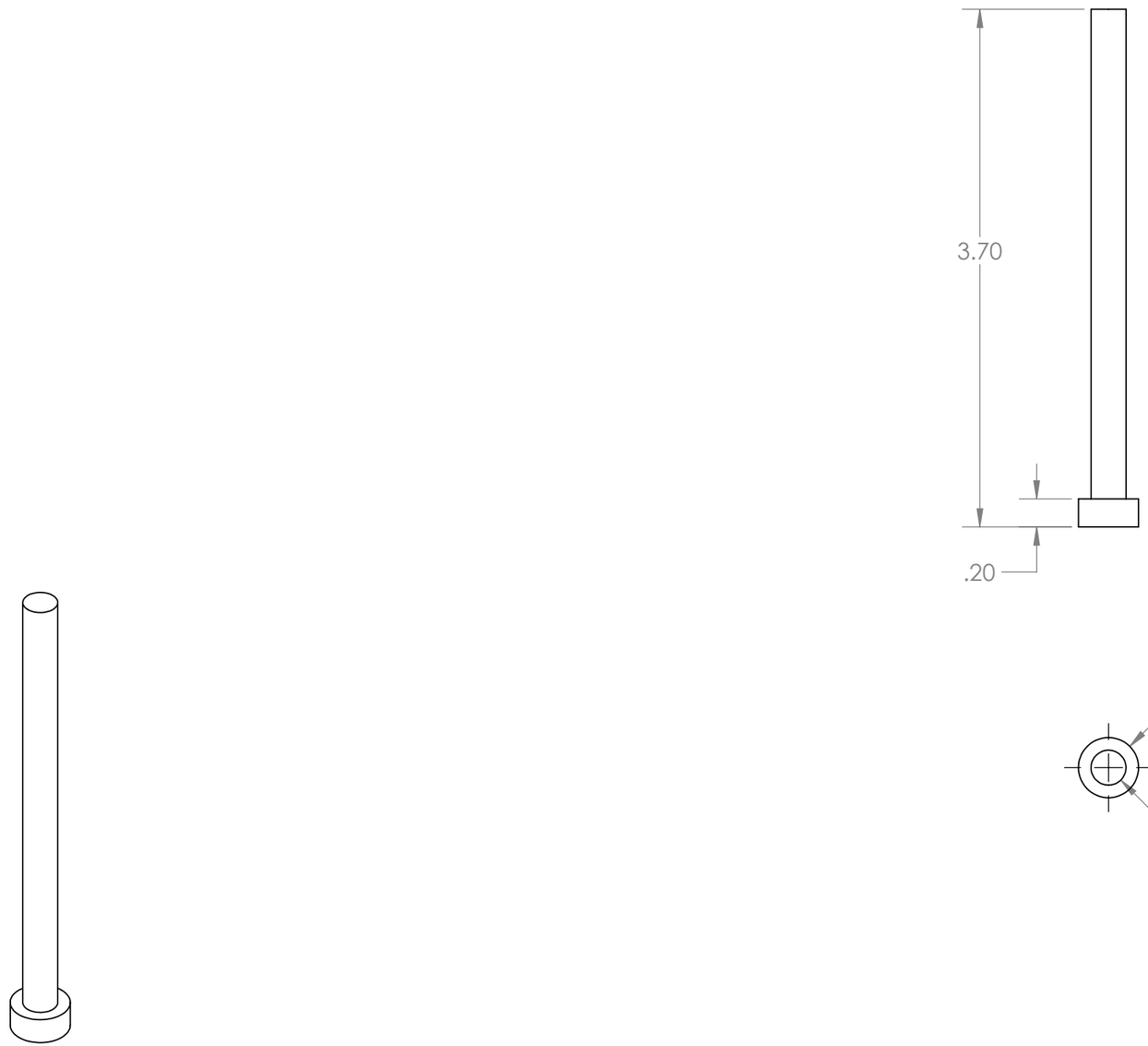

DWG NOTES: (UNLESS OTHERWISE NOTED)

1) ALL UNITS: INCHES

MATERIAL: Aluminium

TOLERANCES (UNLESS NOTED)

DECIMAL: X.X : ±0.015
X.XX : ±0.01
X.XXX : ±0.005

FRACTIONAL: ±1/32

NO. PARTS REQ'D: 10

RENSSELAER POLYTECHNIC INSTITUTE

Strut Stack Peg

DRAWN BY: Daniel Golding/Wesley Koo

E-MAIL: koow@rpi.edu **PHONE:** 650-804-4515

FACULTY ADVISOR: Samuel Chiappone **CHECKED: (INITIALS)**

SIZE **B** | **COURSE NAME/NUMBER:** MP&S A Team | SECTION A

DATE: Wednesday, May 01, 2013 8:00:28 AM

SCALE 1:1 | CAD FILE: 12CandyA_StrutStackPeg1142_AF1142_010328 | SHEET 3 OF 3